MITSUBISHI ELECTRIC

General-Purpose AC Servo

MITSUBISHI SERVO AMPLIFIERS & MOTORS

MELSERVO-JE

SSCNET Ⅲ/H Interface AC Servo

MODEL

MR-JE-_B

SERVO AMPLIFIER

INSTRUCTION MANUAL

● Safety Instructions ●

Please read the instructions carefully before using the equipment.

To use the equipment correctly, do not attempt to install, operate, maintain, or inspect the equipment until you have read through this Instruction Manual, Installation guide, and appended documents carefully. Do not use the equipment until you have a full knowledge of the equipment, safety information and instructions.
In this Instruction Manual, the safety instruction levels are classified into "WARNING" and "CAUTION".

⚠ WARNING	Indicates that incorrect handling may cause hazardous conditions, resulting in death or severe injury.
⚠ CAUTION	Indicates that incorrect handling may cause hazardous conditions, resulting in medium or slight injury to personnel or may cause physical damage.

Note that the ⚠ CAUTION level may lead to a serious consequence according to conditions.
Please follow the instructions of both levels because they are important to personnel safety.
What must not be done and what must be done are indicated by the following diagrammatic symbols.

⃠	Indicates what must not be done. For example, "No Fire" is indicated by .
●	Indicates what must be done. For example, grounding is indicated by .

In this Instruction Manual, instructions at a lower level than the above, instructions for other functions, and so on are classified into "POINT".
After reading this Instruction Manual, keep it accessible to the operator.

1. To prevent electric shock, note the following.

⚠ WARNING

- Before wiring and inspections, turn off the power and wait for 15 minutes or more until the charge lamp turns off. Otherwise, an electric shock may occur. In addition, when confirming whether the charge lamp is off or not, always confirm it from the front of the servo amplifier.
- Ground the servo amplifier and servo motor securely.
- Any person who is involved in wiring and inspection should be fully competent to do the work.
- Do not attempt to wire the servo amplifier and servo motor until they have been installed. Otherwise, it may cause an electric shock.
- Do not operate switches with wet hands. Otherwise, it may cause an electric shock.
- The cables should not be damaged, stressed, loaded, or pinched. Otherwise, it may cause an electric shock.
- To prevent an electric shock, always connect the protective earth (PE) terminal (marked with ⏚) of the servo amplifier to the protective earth (PE) of the cabinet.
- When using an earth-leakage current breaker (RCD), select the type B.
- To avoid an electric shock, insulate the connections of the power supply terminals.

2. To prevent fire, note the following.

⚠ CAUTION

- Install the servo amplifier, servo motor, and regenerative resistor on incombustible material. Installing them directly or close to combustibles will lead to smoke or a fire.
- Always connect a magnetic contactor between the power supply and the power supply (L1, L2, and L3) of the servo amplifier, in order to configure a circuit that shuts down the power supply on the side of the servo amplifier's power supply. If a magnetic contactor is not connected, continuous flow of a large current may cause smoke or a fire when the servo amplifier malfunctions.
- Always connect a molded-case circuit breaker, or a fuse to each servo amplifier between the power supply and the power supply (L1, L2, and L3) of the servo amplifier, in order to configure a circuit that shuts down the power supply on the side of the servo amplifier's power supply. If a molded-case circuit breaker or fuse is not connected, continuous flow of a large current may cause smoke or a fire when the servo amplifier malfunctions.
- When using a regenerative resistor, switch power off with the alarm signal. Otherwise, a regenerative transistor malfunction or the like may overheat the regenerative resistor, causing smoke or a fire.
- When you use a regenerative option with an MR-JE-40B to MR-JE-100B, remove the built-in regenerative resistor and wiring from the servo amplifier.
- Provide adequate protection to prevent screws and other conductive matter, oil and other combustible matter from entering the servo amplifier and servo motor.

3. To prevent injury, note the following.

⚠ CAUTION

- Only the voltage specified in the Instruction Manual should be applied to each terminal. Otherwise, a burst, damage, etc. may occur.
- Connect cables to the correct terminals. Otherwise, a burst, damage, etc. may occur.
- Ensure that polarity (+/-) is correct. Otherwise, a burst, damage, etc. may occur.
- The servo amplifier heat sink, regenerative resistor, servo motor, etc. may be hot while power is on or for some time after power-off. Take safety measures, e.g. provide covers, to avoid accidentally touching the parts (cables, etc.) by hand.

4. Additional instructions

The following instructions should also be fully noted. Incorrect handling may cause a malfunction, injury, electric shock, fire, etc.

(1) Transportation and installation

⚠ CAUTION

- Transport the products correctly according to their mass.
- Stacking in excess of the specified number of product packages is not allowed.
- Do not hold the lead wire of the built-in regenerative resistor when transporting the servo amplifier.
- Install the servo amplifier and the servo motor in a load-bearing place in accordance with the Instruction Manual.
- Do not get on or put heavy load on the equipment.
- The equipment must be installed in the specified direction.
- Leave specified clearances between the servo amplifier and the cabinet walls or other equipment.
- Do not install or operate the servo amplifier and servo motor which have been damaged or have any parts missing.
- Do not block the intake and exhaust areas of the servo amplifier. Otherwise, it may cause a malfunction.
- Do not drop or strike the servo amplifier and servo motor. Isolate them from all impact loads.
- When you keep or use the equipment, please fulfill the following environment.

Item		Environment
Ambient temperature	Operation	0 ˚C to 55 ˚C (non-freezing)
	Storage	-20 ˚C to 65 ˚C (non-freezing)
Ambient humidity	Operation	90%RH or less (non-condensing)
	Storage	
Ambience		Indoors (no direct sunlight); no corrosive gas, inflammable gas, oil mist or dust
Altitude		1000 m or less above sea level
Vibration resistance		5.9 m/s^2, at 10 Hz to 55 Hz (directions of X, Y and Z axes)

- When the product has been stored for an extended period of time, contact your local sales office.
- When handling the servo amplifier, be careful about the edged parts such as corners of the servo amplifier.

⚠ CAUTION

- The servo amplifier must be installed in a metal cabinet.
- When fumigants that contain halogen materials, such as fluorine, chlorine, bromine, and iodine, are used for disinfecting and protecting wooden packaging from insects, they cause malfunction when entering our products. Please take necessary precautions to ensure that remaining materials from fumigant do not enter our products, or treat packaging with methods other than fumigation, such as heat treatment. Additionally, disinfect and protect wood from insects before packing the products.

(2) Wiring

⚠ CAUTION

- Before removing the CNP1 connector from MR-JE-40B to MR-JE-100B, disconnect the lead wires of the regenerative resistor from the CNP1 connector.
- Wire the equipment correctly and securely. Otherwise, the servo motor may operate unexpectedly.
- Do not install a power capacitor, surge killer, or radio noise filter (optional FR-BIF) on the servo amplifier output side.
- To avoid a malfunction, connect the wires to the correct phase terminals (U, V, and W) of the servo amplifier and servo motor.
- Connect the servo amplifier power output (U, V, and W) to the servo motor power input (U, V, and W) directly. Do not let a magnetic contactor, etc. intervene. Otherwise, it may cause a malfunction.

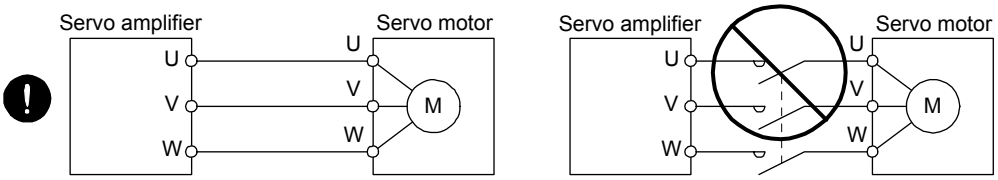

- The connection diagrams in this Instruction Manual are shown for sink interfaces, unless stated otherwise.
- The surge absorbing diode installed to the DC relay for control output should be fitted in the specified direction. Otherwise, the emergency stop and other protective circuits may not operate.

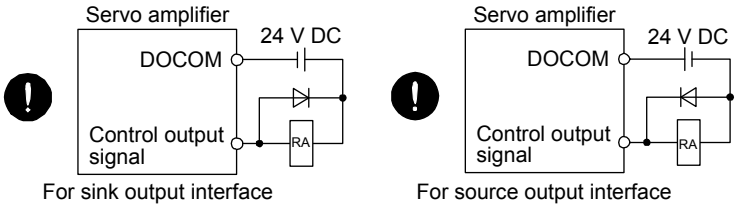

- When the cable is not tightened enough to the terminal block, the cable or terminal block may generate heat because of the poor contact. Be sure to tighten the cable with specified torque.
- Connecting a servo motor of the wrong axis to U, V, W, or CN2 of the servo amplifier may cause a malfunction.

(3) Test run and adjustment

⚠ CAUTION

- Before operation, check the parameter settings. Improper settings may cause some machines to operate unexpectedly.
- Never adjust or change the parameter values drastically as doing so will make the operation unstable.
- Do not get close to moving parts during the servo-on status.

(4) Usage

⚠ CAUTION

- When it is assumed that a hazardous condition may occur due to a power failure or product malfunction, use a servo motor with an external brake to prevent the condition.
- Do not disassemble, repair, or modify the equipment.
- Before resetting an alarm, make sure that the run signal of the servo amplifier is off in order to prevent a sudden restart. Otherwise, it may cause an accident.
- Use a noise filter, etc. to minimize the influence of electromagnetic interference. Electromagnetic interference may be given to the electronic equipment used near the servo amplifier.
- Burning or breaking a servo amplifier may cause a toxic gas. Do not burn or break it.
- Use the servo amplifier with the specified servo motor.
- The electromagnetic brake on the servo motor is designed to hold the motor shaft and should not be used for ordinary braking.
- For such reasons as service life and mechanical structure (e.g. where a ball screw and the servo motor are coupled via a timing belt), the electromagnetic brake may not hold the motor shaft. To ensure safety, install a stopper on the machine side.

(5) Corrective actions

⚠ CAUTION

- When it is assumed that a hazardous condition may occur due to a power failure or product malfunction, use a servo motor with an electromagnetic brake or external brake to prevent the condition.
- Configure an electromagnetic brake circuit so that it is activated also by an external EMG stop switch.

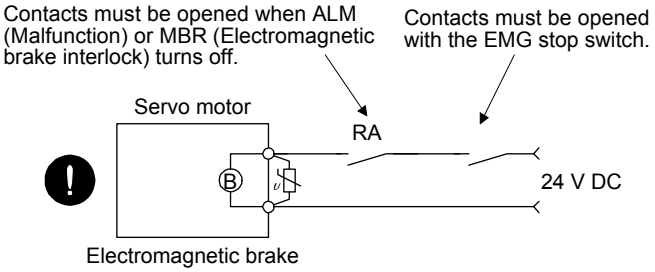

- When any alarm has occurred, eliminate its cause, ensure safety, and deactivate the alarm before restarting operation.
- Provide an adequate protection to prevent unexpected restart after an instantaneous power failure.

(6) Maintenance, inspection and parts replacement

⚠ CAUTION

- With age, the electrolytic capacitor of the servo amplifier will deteriorate. To prevent a secondary accident due to a malfunction, it is recommended that the electrolytic capacitor be replaced every 10 years when it is used in general environment. For replacement, please contact your local sales office.
- When using a servo amplifier whose power has not been turned on for a long time, contact your local sales office.

(7) General instruction

- To illustrate details, the equipment in the diagrams of this Instruction Manual may have been drawn without covers and safety guards. When the equipment is operated, the covers and safety guards must be installed as specified. Operation must be performed in accordance with this Instruction Manual.

● DISPOSAL OF WASTE ●

Please dispose a servo amplifier, battery (primary battery) and other options according to your local laws and regulations.

⚠ EEP-ROM life

The number of write times to the EEP-ROM, which stores parameter settings, etc., is limited to 100,000. If the total number of the following operations exceeds 100,000, the servo amplifier may malfunction when the EEP-ROM reaches the end of its useful life.

- Write to the EEP-ROM due to parameter setting changes
- Write to the EEP-ROM due to device changes

Compliance with global standards

Refer to appendix 4 for the compliance with global standards.

«About the manual»

You must have this Instruction Manual and the following manuals to use this servo. Ensure to prepare them to use the servo safely.

Relevant manuals

Manual name	Manual No.
MELSERVO-JE Servo Amplifier Instruction Manual (Troubleshooting)	SH(NA)030166
MELSERVO HG-KN_/HG-SN_ Servo Motor Instruction Manual	SH(NA)030135
EMC Installation Guidelines	IB(NA)67310

«Cables used for wiring»

Wires mentioned in this Instruction Manual are selected based on the ambient temperature of 40 ˚C.

«U.S. customary units»

U.S. customary units are not shown in this manual. Convert the values if necessary according to the following table.

Quantity	SI (metric) unit	U.S. customary unit
Mass	1 [kg]	2.2046 [lb]
Length	1 [mm]	0.03937 [in]
Torque	1 [N•m]	141.6 [oz•in]
Moment of inertia	1 [(× 10^{-4} kg•m^2)]	5.4675 [oz•in^2]
Load (thrust load/axial load)	1 [N]	0.2248 [lbf]
Temperature	N [°C] × 9/5 + 32	N [°F]

MEMO

CONTENTS

1. FUNCTIONS AND CONFIGURATION 1- 1 to 1-12

1.1 Summary 1- 1
1.2 Function block diagram 1- 2
1.3 Servo amplifier standard specifications 1- 4
1.4 Combinations of servo amplifiers, servo motors, and controllers 1- 5
1.4.1 Combinations of servo amplifiers and servo motors 1- 5
1.4.2 Compatible controller 1- 5
1.5 Function list 1- 6
1.6 Model designation 1- 8
1.7 Structure 1- 9
1.7.1 Parts identification 1- 9
1.8 Configuration including peripheral equipment 1-11

2. INSTALLATION 2- 1 to 2- 8

2.1 Installation direction and clearances 2- 2
2.2 Keep out foreign materials 2- 3
2.3 Encoder cable stress 2- 4
2.4 SSCNET III cable laying 2- 4
2.5 Inspection items 2- 6
2.6 Parts having service lives 2- 7

3. SIGNALS AND WIRING 3- 1 to 3-42

3.1 Input power supply circuit 3- 2
3.2 I/O signal connection example 3-11
3.2.1 For sink I/O interface 3-11
3.2.2 For source I/O interface 3-12
3.3 Explanation of power supply system 3-13
3.3.1 Signal explanations 3-13
3.3.2 Power-on sequence 3-14
3.3.3 Wiring CNP1 and CNP2 3-15
3.4 Connectors and pin assignment 3-17
3.5 Signal (device) explanations 3-18
3.5.1 Input device 3-18
3.5.2 Output device 3-19
3.5.3 Power supply 3-20
3.6 Forced stop deceleration function 3-21
3.6.1 Forced stop deceleration function 3-21
3.6.2 Base circuit shut-off delay time function 3-22
3.6.3 Vertical axis freefall prevention function 3-23
3.6.4 Residual risks of the forced stop function (EM2) 3-23
3.7 Alarm occurrence timing chart 3-24
3.7.1 When you use the forced stop deceleration function 3-24
3.7.2 When you do not use the forced stop deceleration function 3-25
3.7.3 Hot line forced stop function 3-26
3.8 Interfaces 3-32

3.8.1 Internal connection diagram 3-32
3.8.2 Detailed explanation of interfaces 3-33
3.8.3 Source I/O interfaces 3-34
3.9 SSCNET III cable connection 3-35
3.10 Servo motor with an electromagnetic brake 3-37
3.10.1 Safety precautions 3-37
3.10.2 Timing chart 3-38
3.11 Grounding 3-41

4. STARTUP 4- 1 to 4-14

4.1 Switching power on for the first time 4- 1
4.1.1 Startup procedure 4- 1
4.1.2 Wiring check 4- 2
4.1.3 Surrounding environment 4- 3
4.2 Startup 4- 4
4.3 Switch setting and display of the servo amplifier 4- 5
4.3.1 Axis selection rotary switch (SW1) 4- 5
4.3.2 Scrolling display 4- 7
4.3.3 Status display of an axis 4- 8
4.4 Test operation 4-10
4.5 Test operation mode 4-10
4.5.1 Test operation mode in MR Configurator2 4-11
4.5.2 Motor-less operation in the controller 4-13

5. PARAMETERS 5- 1 to 5-38

5.1 Parameter list 5- 1
5.1.1 Basic setting parameters ([Pr. PA_ _]) 5- 2
5.1.2 Gain/filter setting parameters ([Pr. PB_ _]) 5- 3
5.1.3 Extension setting parameters ([Pr. PC_ _]) 5- 4
5.1.4 I/O setting parameters ([Pr. PD_ _]) 5- 6
5.1.5 Extension setting 2 parameters ([Pr. PE_ _]) 5- 7
5.1.6 Extension setting 3 parameters ([Pr. PF_ _]) 5- 8
5.2 Detailed list of parameters 5-10
5.2.1 Basic setting parameters ([Pr. PA_ _]) 5-10
5.2.2 Gain/filter setting parameters ([Pr. PB_ _]) 5-18
5.2.3 Extension setting parameters ([Pr. PC_ _]) 5-30
5.2.4 I/O setting parameters ([Pr. PD_ _]) 5-33
5.2.5 Extension setting 2 parameters ([Pr. PE_ _]) 5-36
5.2.6 Extension setting 3 parameters ([Pr. PF_ _]) 5-37

6. NORMAL GAIN ADJUSTMENT 6- 1 to 6-18

6.1 Different adjustment methods 6- 1
6.1.1 Adjustment on a single servo amplifier 6- 1
6.1.2 Adjustment using MR Configurator2 ..... 6- 2
6.2 One-touch tuning 6- 3
6.2.1 One-touch tuning flowchart 6- 4
6.2.2 Display transition and operation procedure of one-touch tuning 6- 5
6.2.3 Caution for one-touch tuning 6- 8

6.3 Auto tuning 6- 9
6.3.1 Auto tuning mode 6- 9
6.3.2 Auto tuning mode basis 6-10
6.3.3 Adjustment procedure by auto tuning 6-11
6.3.4 Response level setting in auto tuning mode 6-12
6.4 Manual mode 6-13
6.5 2 gain adjustment mode 6-16

7. SPECIAL ADJUSTMENT FUNCTIONS 7- 1 to 7-30

7.1 Filter setting 7- 1
7.1.1 Machine resonance suppression filter 7- 1
7.1.2 Adaptive filter II 7- 4
7.1.3 Shaft resonance suppression filter 7- 6
7.1.4 Low-pass filter 7- 7
7.1.5 Advanced vibration suppression control II 7- 7
7.1.6 Command notch filter 7-11
7.2 Gain switching function 7-13
7.2.1 Applications 7-13
7.2.2 Function block diagram 7-14
7.2.3 Parameter 7-15
7.2.4 Gain switching procedure 7-18
7.3 Tough drive function 7-22
7.3.1 Vibration tough drive function 7-22
7.3.2 Instantaneous power failure tough drive function 7-24
7.4 Model adaptive control disabled 7-26
7.5 Lost motion compensation function 7-27

8. TROUBLESHOOTING 8- 1 to 8- 6

8.1 Explanation for the lists 8- 1
8.2 Alarm list 8- 2
8.3 Warning list 8- 5

9. DIMENSIONS 9- 1 to 9- 4

9.1 Servo amplifier 9- 1
9.2 Connector 9- 4

10. CHARACTERISTICS 10- 1 to 10- 8

10.1 Overload protection characteristics 10- 1
10.2 Power supply capacity and generated loss 10- 3
10.3 Dynamic brake characteristics 10- 5
10.3.1 Dynamic brake operation 10- 5
10.3.2 Permissible load to motor inertia when the dynamic brake is used 10- 6
10.4 Cable bending life 10- 7
10.5 Inrush current at power-on 10- 7

11. OPTIONS AND PERIPHERAL EQUIPMENT 11- 1 to 11-48

11.1 Cable/connector sets 11- 1
11.1.1 Combinations of cable/connector sets 11- 2
11.1.2 SSCNET III cable 11- 5
11.1.3 Battery cable and junction battery cable 11- 7
11.2 Regenerative option 11- 8
11.2.1 Combination and regenerative power 11- 8
11.2.2 Selection of regenerative option 11- 9
11.2.3 Parameter setting 11-10
11.2.4 Connection of regenerative option 11-11
11.2.5 Dimensions 11-15
11.3 Junction terminal block PS7DW-20V14B-F (recommended) 11-17
11.4 MR Configurator2 11-18
11.4.1 Specifications 11-18
11.4.2 System requirements 11-19
11.4.3 Precautions for using USB communication function 11-20
11.5 Battery 11-21
11.5.1 Selection of battery 11-21
11.5.2 MR-BAT6V1SET-A battery 11-22
11.5.3 MR-BT6VCASE battery case 11-26
11.5.4 MR-BAT6V1 battery 11-32
11.6 Selection example of wires 11-33
11.7 Molded-case circuit breakers, fuses, magnetic contactors 11-34
11.8 Power factor improving AC reactor 11-35
11.9 Relay (recommended) 11-36
11.10 Noise reduction techniques 11-37
11.11 Earth-leakage current breaker 11-43
11.12 EMC filter (recommended) 11-45

12. ABSOLUTE POSITION DETECTION SYSTEM 12- 1 to 12- 4

12.1 Summary 12- 1
12.1.1 Features 12- 1
12.1.2 Configuration 12- 2
12.1.3 Parameter setting 12- 2
12.1.4 Confirmation of absolute position detection data 12- 2
12.2 Battery 12- 3
12.2.1 Using the MR-BAT6V1SET-A battery 12- 3
12.2.2 Using the MR-BT6VCASE battery case 12- 4

APPENDIX App. - 1 to App. -18

App. 1 Peripheral equipment manufacturer (for reference) ..... App.- 1
App. 2 Handling of AC servo amplifier batteries for the United Nations Recommendations on the Transport of Dangerous Goods ..... App.- 1
App. 3 Symbol for the new EU Battery Directive ..... App.- 3
App. 4 Compliance with global standards ..... App.- 3
App. 5 SSCNET III cable (SC-J3BUS_M-C) manufactured by Mitsubishi Electric System & Service App.-15
App. 6 Low-voltage directive App.-16

App. 7 When turning on or off the input power supply with DC power supply App.-17
App. 8 When using the hot line forced stop function in combination with MR-J4-_B servo amplifier App.-18

MEMO

1. FUNCTIONS AND CONFIGURATION

1.1 Summary

POINT
●Refer to section 1.4.2 for compatible controllers.

The Mitsubishi general-purpose AC servo MELSERVO-JE series have limited functions with keeping high performance based on MELSERVO-J4 series.
The MR-JE-_B servo amplifier is connected to controllers, including a servo system controller, on the high-speed synchronous network SSCNET III/H. The servo amplifier directly receives a command from a controller to drive a servo motor.
SSCNET III/H achieves high-speed communication of 150 Mbps full duplex with high noise immunity due to the SSCNET III optical cables. Large amounts of data can be exchanged in real-time between the controller and the servo amplifier. Servo monitor information can be stored in the upper information system and used for control.
With one-touch tuning and real-time auto tuning, you can easily and automatically adjust the servo gains according to the machine.
The tough drive function, drive recorder function, and preventive maintenance support function strongly support machine maintenance.
The servo amplifier has a USB communication interface. Therefore, you can connect the servo amplifier to the personal computer with MR Configurator2 installed to perform the parameter setting, test operation, gain adjustment, and others.
The servo motor equipped with an absolute position encoder whose resolution is 131072 pulses/rev will enable a high-accuracy positioning.

1.2 Function block diagram

The function block diagram of this servo is shown below.

(1) MR-JE-100B or less

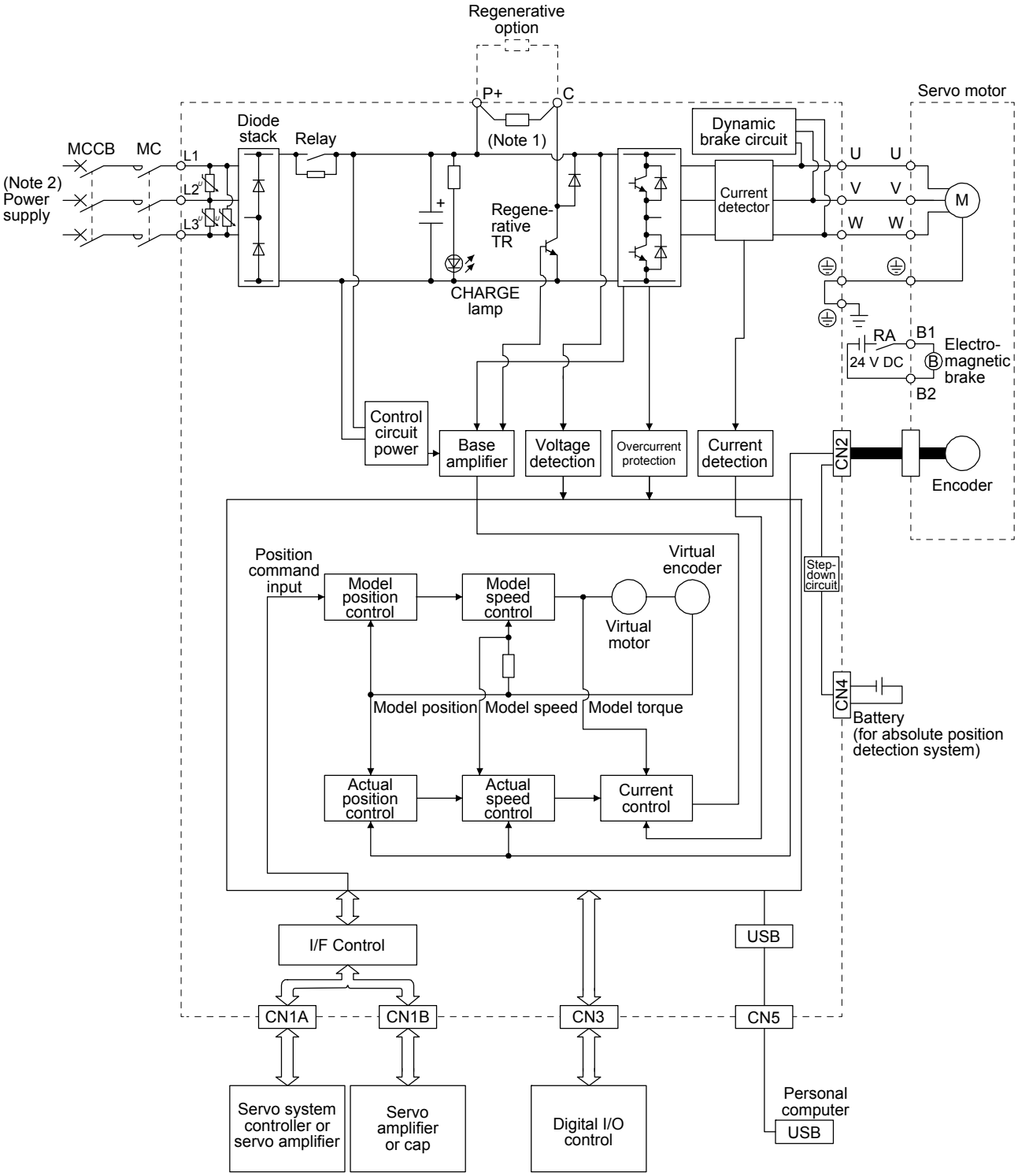

Note 1. The built-in regenerative resistor is not provided for MR-JE-10B and MR-JE-20B.
2. For 1-phase 200 V AC to 240 V AC, connect the power supply to L1 and L3. Leave L2 open.
For the power supply specifications, refer to section 1.3.

(2) MR-JE-200B or more

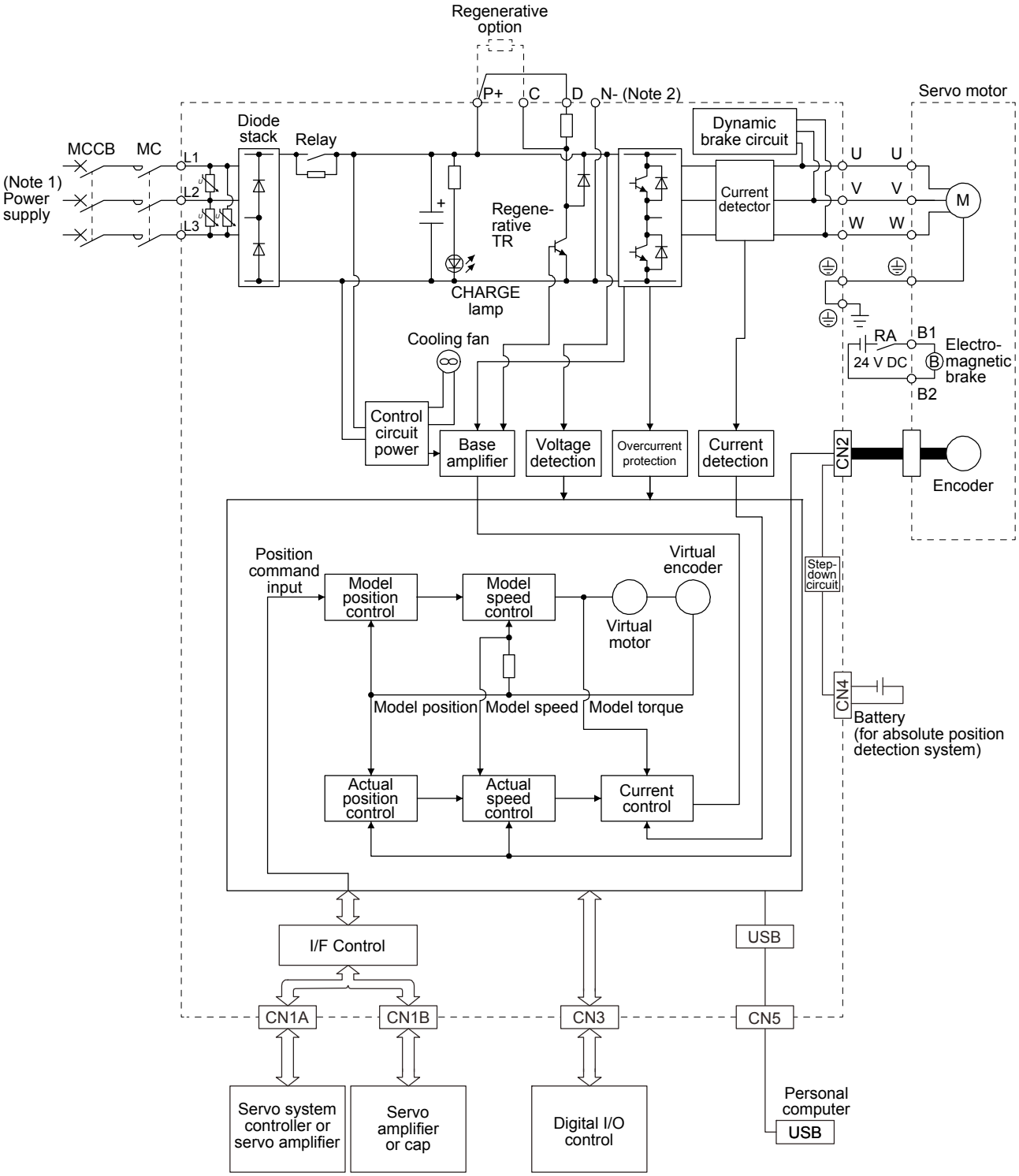

Note 1. A 1-phase 200 V AC to 240 V AC power supply may be used with the servo amplifier of MR-JE-200B. For 1-phase 200 V AC to 240 V AC, connect the power supply to L1 and L2. Leave L3 open. For the power supply specifications, refer to section 1.3.

2. This terminal is for manufacturer adjustment. Leave this terminal open.

1.3 Servo amplifier standard specifications

Model: MR-JE-			10B	20B	40B	70B	100B	200B	300B
Output	Rated voltage		3-phase 170 V AC						
	Rated current	[A]	1.1	1.5	2.8	5.8	6.0	11.0	11.0
Power supply input	Voltage/frequency		3-phase or 1-phase 200 V AC to 240 V AC, 50 Hz/60 Hz				3-phase or 1-phase 200 V AC to 240 V AC, 50 Hz/60 Hz (Note 5)		3-phase 200 V AC to 240 V AC, 50 Hz/60 Hz
	Rated current (Note 1)	[A]	0.9	1.5	2.6	3.8	5.0	10.5	14.0
	Permissible voltage fluctuation		3-phase or 1-phase 170 V AC to 264 V AC				3-phase or 1-phase 170 V AC to 264 V AC (Note 5)		3-phase 170 V AC to 264 V AC
	Permissible frequency fluctuation		Within ±5%						
	Power supply capacity	[kVA]	Refer to section 10.2.						
	Inrush current	[A]	Refer to section 10.5.						
Interface power supply	Voltage		24 V DC ± 10%						
	Current capacity	[A]	(Note 2) 0.1						
Control method			Sine-wave PWM control, current control method						
Dynamic brake			Built-in						
SSCNET III/H communication cycle (Note 3)			0.444 ms, 0.888 ms						
Communication function			USB: Connection to a personal computer or others (MR Configurator2-compatible)						
Protective functions			Overcurrent shut-off, regenerative overvoltage shut-off, overload shut-off (electronic thermal), servo motor overheat protection, encoder error protection, regenerative error protection, undervoltage protection, instantaneous power failure protection, overspeed protection, and error excessive protection						
Compliance to standards	CE marking		LVD: EN 61800-5-1 EMC: EN 61800-3 MD: EN ISO 13849-1, EN 61800-5-2, EN 62061						
	UL standard		UL 508C						
Structure (IP rating)			Natural cooling, open (IP20)					Force cooling, open (IP20)	
Close mounting (Note 4)	3-phase power supply input		Possible						
	1-phase power supply input		Possible				Impossible		
Environment	Ambient temperature	Operation	0 ˚C to 55 ˚C (non-freezing)						
		Storage	-20 ˚C to 65 ˚C (non-freezing)						
	Ambient humidity	Operation	90%RH or lower (non-condensing)						
		Storage							
	Ambience		Indoors (no direct sunlight); no corrosive gas, inflammable gas, oil mist or dust						
	Altitude		1000 m or less above sea level						
	Vibration resistance		5.9 m/s^2, at 10 Hz to 55 Hz (directions of X, Y and Z axes)						
Mass		[kg]	0.8			1.5		2.1	

Note 1. This value is applicable when a 3-phase power supply is used.
2. The current capacity 0.1 A is applicable when all I/O signals are used. The current capacity can be decreased by reducing the number of I/O points.
3. The communication cycle depends on the controller specifications and the number of axes connected.
4. When closely mounting the servo amplifier, operate them at the ambient temperatures of 0 ˚C to 45 ˚C or at 75% or smaller effective load ratio.
5. When using 1-phase 200 V AC to 240 V AC power supply, operate the servo amplifier at 75% or smaller effective load ratio.

1.4 Combinations of servo amplifiers, servo motors, and controllers

1.4.1 Combinations of servo amplifiers and servo motors

Servo amplifier	Servo motor
MR-JE-10B	HG-KN13_
MR-JE-20B	HG-KN23_
MR-JE-40B	HG-KN43_
MR-JE-70B	HG-KN73_ HG-SN52_
MR-JE-100B	HG-SN102_
MR-JE-200B	HG-SN152_ HG-SN202_
MR-JE-300B	HG-SN302_

1.4.2 Compatible controller

For the simple motion module, refer to the user's manual of each series.

Series	Simple motion module
MELSEC iQ-R series	RD77MS_
MELSEC-Q series	QD77MS_
MELSEC-L series	LD77MS_
MELSEC iQ-F series	FX5-40SSC-S

1.5 Function list

The following table lists the functions of this servo. For details of the functions, refer to each section indicated in the detailed explanation field.

Function	Description	Detailed explanation
Model adaptive control	This function realizes a high response and stable control following the ideal model. The two-degrees-of-freedom model adaptive control enables you to set a response to the command and response to the disturbance separately. Additionally, this function can be disabled. Refer to section 7.4 to disable this function.	
Position control mode	This servo amplifier is used as a position control servo.	
Speed control mode	This servo amplifier is used as a speed control servo.	
Torque control mode	This servo amplifier is used as a torque control servo.	
High-resolution encoder	A high-resolution encoder of 131072 pulses/rev is used as the encoder of the rotary servo motor compatible with the MELSERVO-JE series.	
Absolute position detection system	Setting a home position once makes home position return unnecessary at every power-on.	Chapter 12
Gain switching function	You can switch gains during rotation and during stop, and can use input devices to switch gains during operation.	Section 7.2
Advanced vibration suppression control II	This function suppresses vibration at the arm end or residual vibration.	Section 7.1.5
Machine resonance suppression filter	This filter function (notch filter) decreases the gain of the specific frequency to suppress the resonance of the mechanical system.	Section 7.1.1
Shaft resonance suppression filter	When a load is mounted to the servo motor shaft, resonance by shaft torsion during driving may generate a mechanical vibration at high frequency. The shaft resonance suppression filter suppresses the vibration.	Section 7.1.3
Adaptive filter II	The servo amplifier detects mechanical resonance and sets filter characteristics automatically to suppress mechanical vibration.	Section 7.1.2
Low-pass filter	This function suppresses high-frequency resonance which occurs as servo system response is increased.	Section 7.1.4
Machine analyzer function	This function analyzes the frequency characteristic of the mechanical system by simply connecting an MR Configurator2 installed personal computer and servo amplifier. MR Configurator2 is necessary for this function.	
Robust filter	This function enhances the disturbance response when the response level remains low because the load to motor inertia ratio of axes, such as a roll feed axis, is high.	[Pr. PE41]
Slight vibration suppression control	This function suppresses vibration of ±1 pulse generated at a servo motor stop.	[Pr. PB24]
Auto tuning	This function automatically adjusts the gain to an optimum value if load applied to the servo motor shaft varies.	Section 6.3
Regenerative option	Used when the built-in regenerative resistor of the servo amplifier does not have sufficient regenerative capability for the regenerative power generated.	Section 11.2
Alarm history clear	This function clears the alarm history.	[Pr. PC21]
Output signal selection (device settings)	The output devices including MBR (Electromagnetic brake interlock) and ALM (Malfunction) can be assigned to certain pins of the CN3 connector.	[Pr. PD07]
Output signal (DO) forced output	Output signal can be forced on/off independently of the servo status. Use this function for checking output signal wiring, etc.	Section 4.5.1 (1) (d)
Test operation mode	Jog operation, positioning operation, motor-less operation, DO forced output, and program operation MR Configurator2 is necessary for this function.	Section 4.5
MR Configurator2	Using a personal computer, you can perform the parameter setting, test operation, monitoring, and others.	Section 11.4
One-touch tuning	Gain adjustment is performed just by one click on a certain button on MR Configurator2. MR Configurator2 is necessary for this function.	Section 6.2
Tough drive function	This function makes the equipment continue operating even under the condition that an alarm occurs. The tough drive function includes two types: the vibration tough drive and the instantaneous power failure tough drive.	Section 7.3

Function	Description	Detailed explanation
Drive recorder function	This function continuously monitors the servo status and records the status transition before and after an alarm for a fixed period of time. You can check the recorded data on the drive recorder window on MR Configurator2 by clicking the "Graph" button. However, the drive recorder will not operate on the following conditions. 1. You are using the graph function of MR Configurator2. 2. You are using the machine analyzer function. 3. [Pr. PF21] is set to "-1". 4. The controller is not connected (except the test operation mode). 5. An alarm related to the controller is occurring.	[Pr. PA23]
Servo amplifier life diagnosis function	You can check the cumulative energization time and the number of on/off times of the inrush relay. This function gives an indication of the replacement time for parts of the servo amplifier including a capacitor and a relay before they malfunction. MR Configurator2 is necessary for this function.	
Power monitoring function	This function calculates the power running energy and the regenerative power from the data in the servo amplifier such as speed and current. Power consumption and others are displayed on MR Configurator2. Since the servo amplifier sends data to a servo system controller, you can analyze the data and display the data on a display with the SSCNET III/H system.	
Machine diagnosis function	From the data in the servo amplifier, this function estimates the friction and vibrational component of the drive system in the equipment and recognizes an error in the machine parts, including a ball screw and bearing. MR Configurator2 is necessary for this function.	
Continuous operation to torque control mode	This function allows smooth switching of the mode from the position control mode or speed control mode to the torque control mode without stopping. This function eliminates rapid change of speed and torque, contributing to reduction in load to the machine and high-quality product molding. For details of the continuous operation to torque control mode, refer to the manuals for servo system controllers.	[Pr. PB03] Manuals of servo system controllers
Lost motion compensation function	This function corrects response delays caused when the machine travel direction is reversed.	Section 7.5
Hot line forced stop function	This function enables all the normally operating MR-JE-_B servo amplifiers to decelerate to a stop by transmitting hot line forced stop signals via the controller if an alarm occurs in the MR-JE-_B servo amplifier.	Section 3.7.3

1.6 Model designation

(1) Rating plate

The following shows an example of the rating plate for explanation of each item.

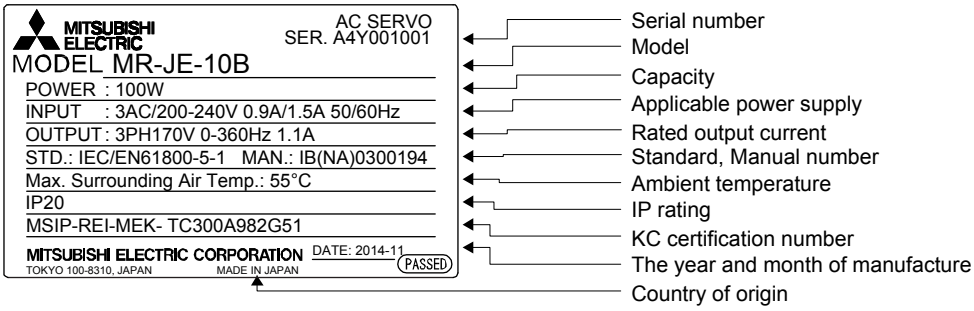

(2) Model

The following describes what each block of a model name indicates.

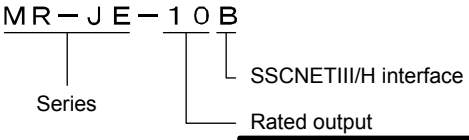

Symbol	Rated output [kW]
10	0.1
20	0.2
40	0.4
70	0.75
100	1
200	2
300	3

1.7 Structure

1.7.1 Parts identification

(1) MR-JE-100B or less

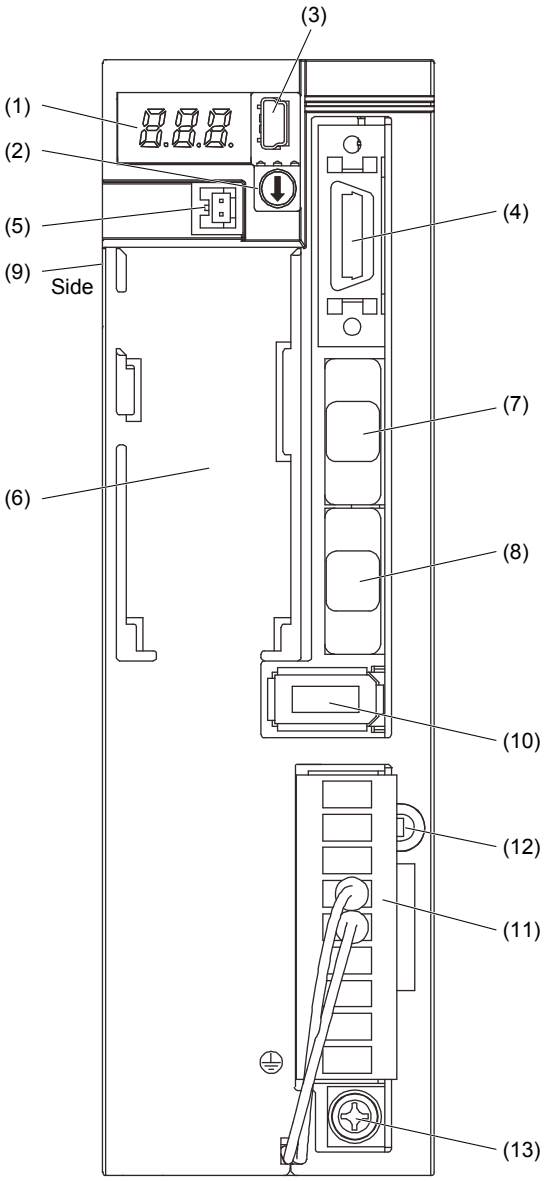

No.	Name/Application	Detailed explanation
(1)	Display The 3-digit, 7-segment LED shows the servo status and the alarm number.	Section 4.3
(2)	Axis selection rotary switch (SW1) Used to set the axis number of the servo amplifier.	
(3)	USB communication connector (CN5) Used to connect this connector to a personal computer.	Section 11.4
(4)	I/O signal connector (CN3) Used to connect digital I/O signals.	Section 3.2 Section 3.4
(5)	Battery connector (CN4) Used to connect the battery for absolute position data backup.	Chapter 12
(6)	Battery holder Used to house the battery for absolute position data backup.	
(7)	SSCNET III cable connector (CN1A) Used to connect the servo system controller or the previous axis servo amplifier.	Section 3.2 Section 3.4
(8)	SSCNET III cable connector (CN1B) Used to connect the next axis servo amplifier. For the final axis, put a cap.	
(9)	Rating plate	Section 1.6
(10)	Encoder connector (CN2) Used to connect the servo motor encoder.	Section 3.4
(11)	Power connector (CNP1) Used to connect the input power supply, built-in regenerative resistor, regenerative option, and servo motor.	Section 3.1 Section 3.3
(12)	Charge lamp When the main circuit is charged, this lamp will light up. While this lamp is lit, do not reconnect the cables.	
(13)	Protective earth (PE) terminal Grounding terminal	Section 3.1 Section 3.3

(2) MR-JE-200B or more

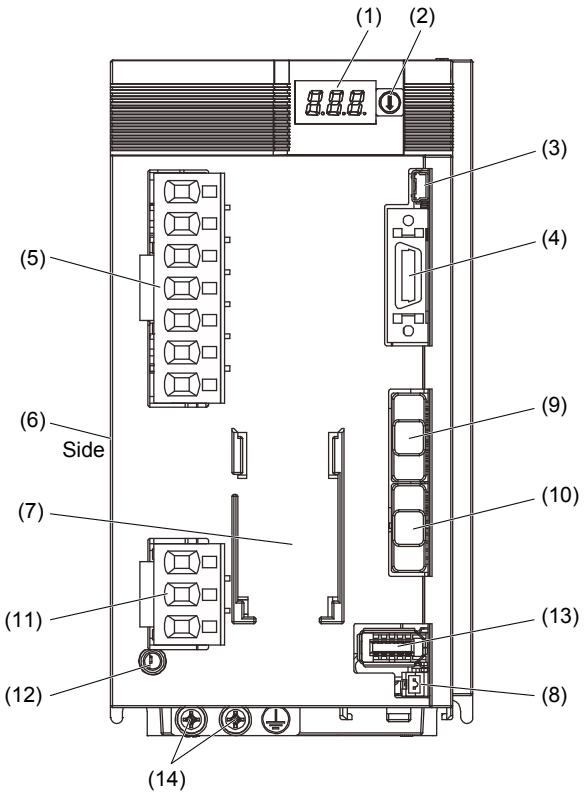

No.	Name/Application	Detailed explanation
(1)	Display The 3-digit, 7-segment LED shows the servo status and the alarm number.	Section 4.3
(2)	Axis selection rotary switch (SW1) Used to set the axis number of the servo amplifier.	
(3)	USB communication connector (CN5) Used to connect this connector to a personal computer.	Section 11.4
(4)	I/O signal connector (CN3) Used to connect digital I/O signals.	Section 3.2 Section 3.4
(5)	Power connector (CNP1) Used to connect the input power supply and regenerative option.	Section 3.1 Section 3.3
(6)	Rating plate	Section 1.6
(7)	Battery holder Used to house the battery for absolute position data backup.	Chapter 12
(8)	Battery connector (CN4) Used to connect the battery for absolute position data backup.	
(9)	SSCNET III cable connector (CN1A) Used to connect the servo system controller or the previous axis servo amplifier.	Section 3.2 Section 3.4
(10)	SSCNET III cable connector (CN1B) Used to connect the next axis servo amplifier. For the final axis, put a cap.	
(11)	Servo motor power connector (CNP2) Used to connect the servo motor.	Section 3.1 Section 3.3
(12)	Charge lamp When the main circuit is charged, this lamp will light up. While this lamp is lit, do not reconnect the cables.	
(13)	Encoder connector (CN2) Used to connect the servo motor encoder.	Section 3.4
(14)	Protective earth (PE) terminal Grounding terminal	Section 3.1 Section 3.3

1.8 Configuration including peripheral equipment

⚠CAUTION ●Connecting a servo motor of the wrong axis to U, V, W, or CN2 of the servo amplifier may cause a malfunction.

POINT

●Equipment other than the servo amplifier and servo motor are optional or recommended products.

(1) MR-JE-100B or less

The diagram shows MR-JE-40B.

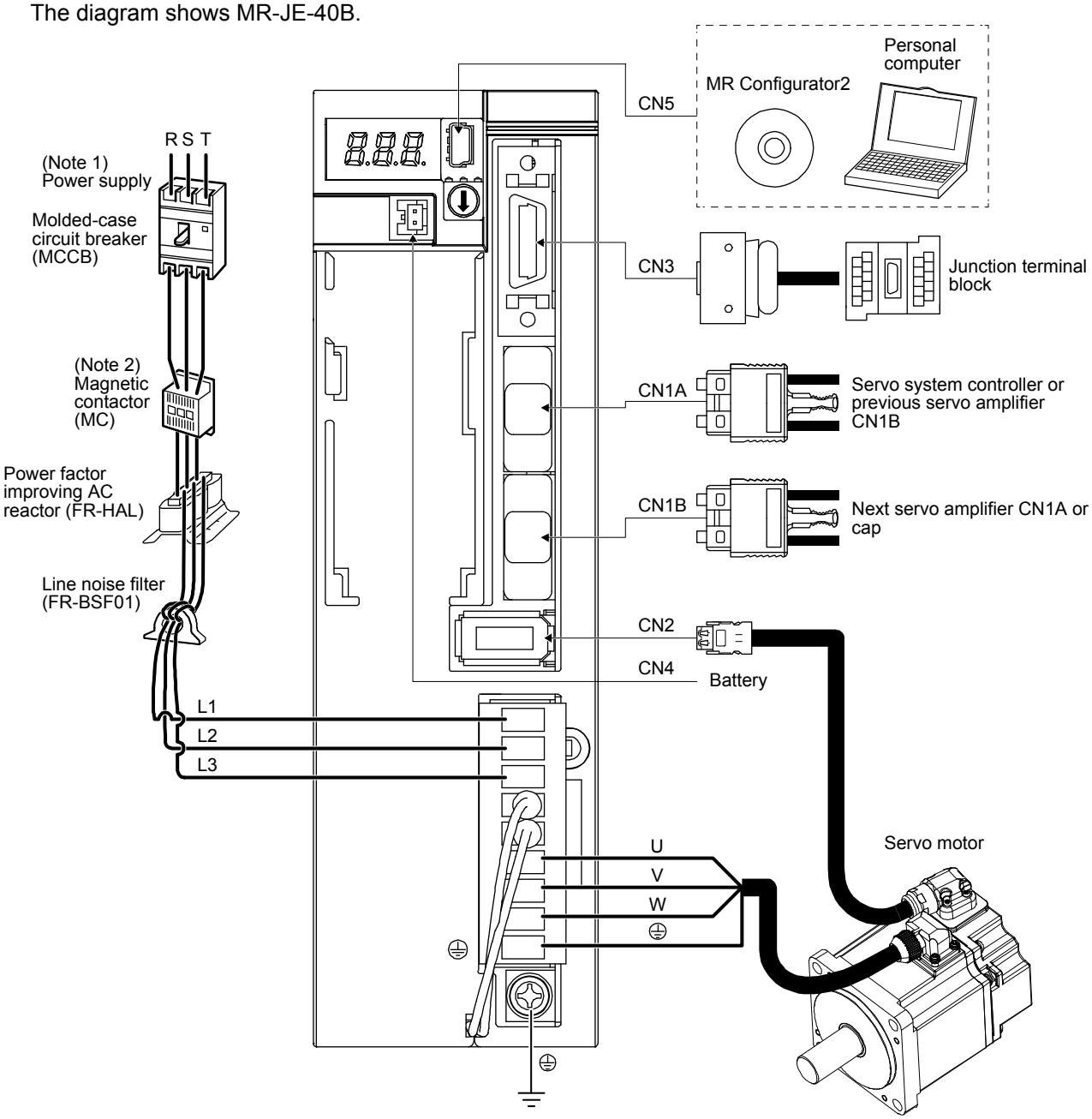

Note 1. For 1-phase 200 V AC to 240 V AC, connect the power supply to L1 and L3. Leave L2 open. For the power supply specifications, refer to section 1.3.

2. Depending on the power supply voltage and operation pattern, bus voltage can decrease. This can shift the mode to the dynamic brake deceleration during forced stop deceleration. When dynamic brake deceleration is not required, slow the time to turn off the magnetic contactor.

(2) MR-JE-200B or more

The diagram shows MR-JE-200B.

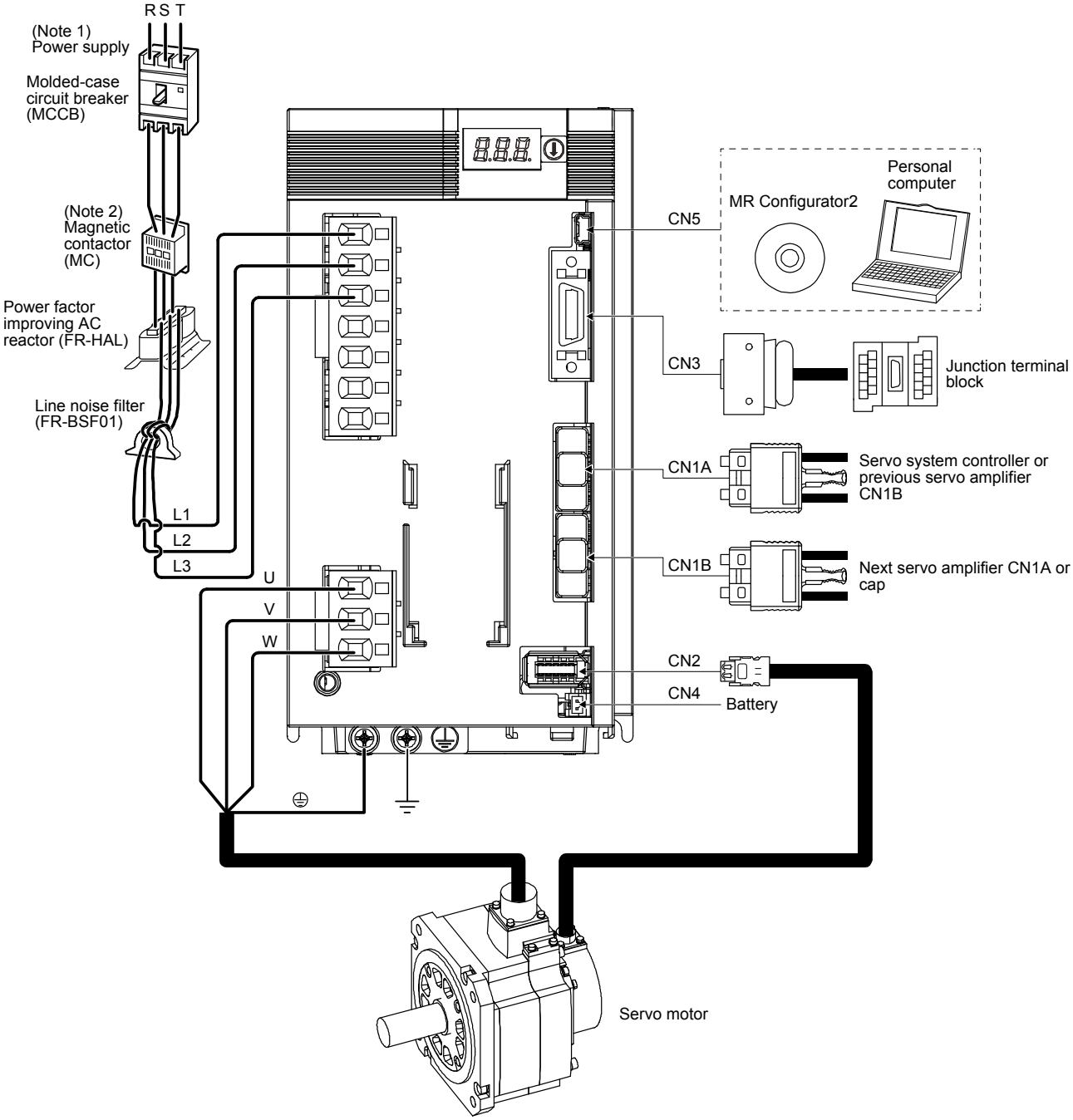

Note 1. A 1-phase 200 V AC to 240 V AC power supply may be used with the servo amplifier of MR-JE-200B. For 1-phase 200 V AC to 240 V AC, connect the power supply to L1 and L2. Leave L3 open. For the power supply specifications, refer to section 1.3.

2. Depending on the power supply voltage and operation pattern, bus voltage can decrease. This can shift the mode to the dynamic brake deceleration during forced stop deceleration. When dynamic brake deceleration is not required, slow the time to turn off the magnetic contactor.

2. INSTALLATION

⚠WARNING	●To prevent electric shock, ground each equipment securely.

⚠CAUTION	●Stacking in excess of the specified number of product packages is not allowed. ●Do not hold the lead wire of the built-in regenerative resistor when transporting the servo amplifier. ●Install the equipment on incombustible material. Installing them directly or close to combustibles will lead to a fire. ●Install the servo amplifier and the servo motor in a load-bearing place in accordance with the Instruction Manual. ●Do not get on or put heavy load on the equipment. Otherwise, it may cause injury. ●Use the equipment within the specified environment. For the environment, refer to section 1.3. ●Provide an adequate protection to prevent screws and other conductive matter, oil and other combustible matter from entering the servo amplifier. ●Do not block the intake and exhaust areas of the servo amplifier. Otherwise, it may cause a malfunction. ●Do not drop or strike the servo amplifier. Isolate it from all impact loads. ●Do not install or operate the servo amplifier which has been damaged or has any parts missing. ●When the product has been stored for an extended period of time, contact your local sales office. ●When handling the servo amplifier, be careful about the edged parts such as corners of the servo amplifier. ●The servo amplifier must be installed in a metal cabinet. ●When fumigants that contain halogen materials, such as fluorine, chlorine, bromine, and iodine, are used for disinfecting and protecting wooden packaging from insects, they cause malfunction when entering our products. Please take necessary precautions to ensure that remaining materials from fumigant do not enter our products, or treat packaging with methods other than fumigation, such as heat treatment. Additionally, disinfect and protect wood from insects before packing the products.

2.1 Installation direction and clearances

⚠CAUTION	●The equipment must be installed in the specified direction. Otherwise, it may cause a malfunction. ●Leave specified clearances between the servo amplifier and the cabinet walls or other equipment. Otherwise, it may cause a malfunction.

MR-JE-40B to MR-JE-100B have a regenerative resistor on their back face. The regenerative resistor generates heat of 100 °C higher than the ambient temperature. Please fully consider heat dissipation, installation position, etc. when installing the servo amplifier.

(1) Installation clearances of the servo amplifier

(a) Installation of one servo amplifier

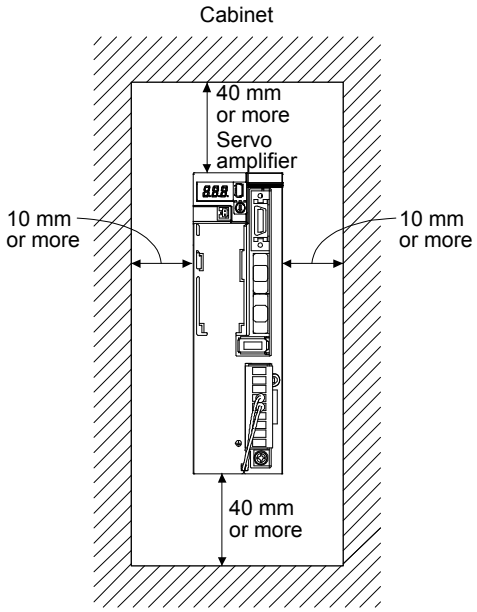

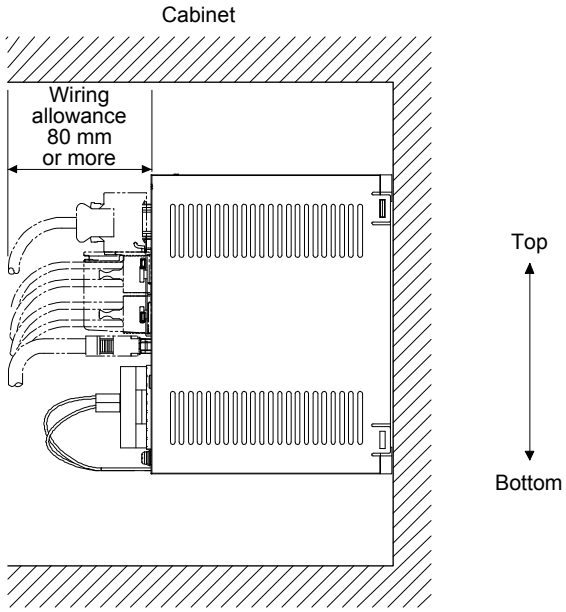

(b) Installation of two or more servo amplifiers

POINT
●Close mounting is possible depending on the capacity of the servo amplifier. Refer to section 1.3 for availability of close mounting.

Leave a large clearance between the top of the servo amplifier and the cabinet walls, and install a cooling fan to prevent the internal temperature of the cabinet from exceeding the environment. When mounting the servo amplifiers closely, leave a clearance of 1 mm between the adjacent servo amplifiers in consideration of mounting tolerances. In this case, keep the ambient temperature within 0 ˚C to 45 ˚C or use the servo amplifier with 75% or lower of the effective load ratio.

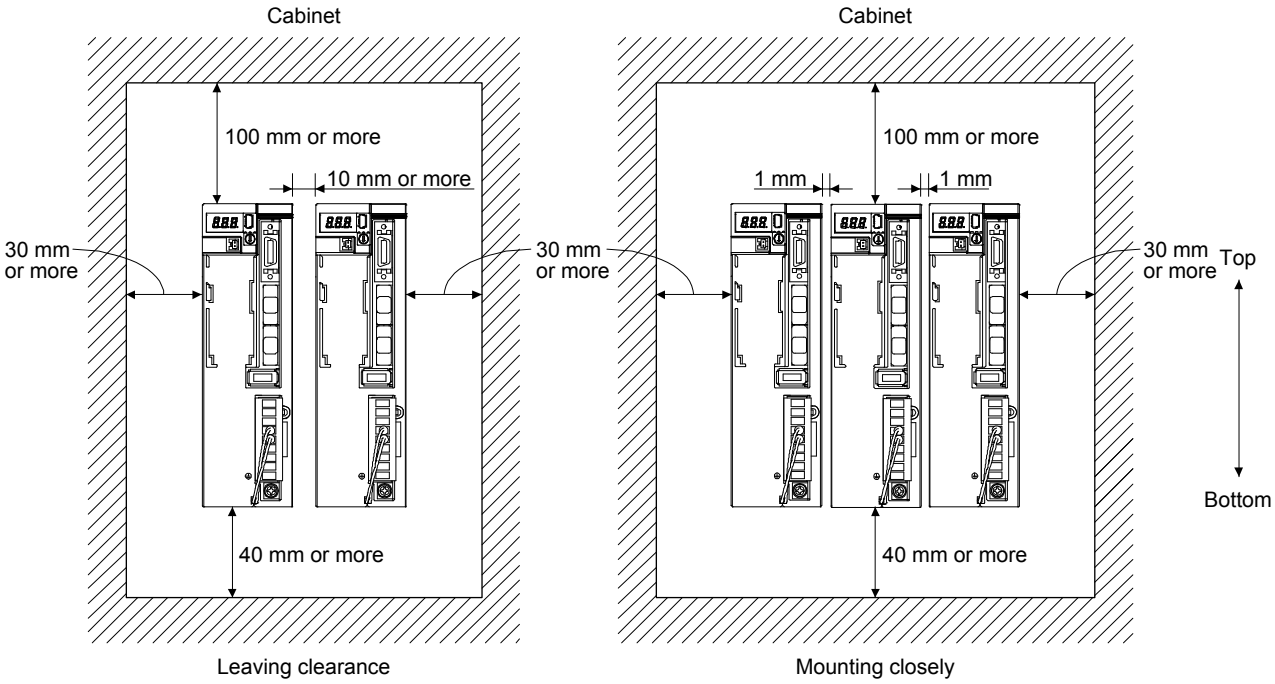

(2) Others
When using heat generating equipment such as the regenerative option, install them with full consideration of heat generation so that the servo amplifier is not affected.
Install the servo amplifier on a perpendicular wall in the correct vertical direction.

2.2 Keep out foreign materials

(1) When drilling the cabinet, prevent drill chips and wire fragments from entering the servo amplifier.

(2) Prevent oil, water, metallic dust, etc. from entering the servo amplifier through openings in the cabinet or a cooling fan installed on the ceiling.

(3) When installing the cabinet in a place where toxic gas, dirt, and dust exist, conduct an air purge (force clean air into the cabinet from outside to make the internal pressure higher than the external pressure) to prevent such materials from entering the cabinet.

2.3 Encoder cable stress

(1) The way of clamping the cable must be fully examined so that bending stress and cable's own weight stress are not applied to the cable connection.

(2) For use in any application where the servo motor moves, fix the cables (encoder, power supply, and brake) with having some slack from the connector connection part of the servo motor to avoid putting stress on the connector connection part. Use the optional encoder cable within the bending life range. Use the power supply and brake wiring cables within the bending life of the cables.

(3) Avoid any probability that the cable sheath might be cut by sharp chips, rubbed by a machine corner, or stamped by workers or vehicles.

(4) For installation on a machine where the servo motor moves, the flexing radius should be made as large as possible. Refer to section 10.4 for the bending life.

2.4 SSCNET III cable laying

The SSCNET III cable is made from optical fiber. If power such as a major shock, lateral pressure, haul, sudden bending, or twist is applied to the optical fiber, its inside distorts or breaks, and optical transmission will not be available. Especially, as the optical fiber for MR-J3BUS_M/MR-J3BUS_M-A is made of synthetic resin, it melts down if being left near the fire or high temperature. Therefore, do not make it touch the part that can become hot such as heat sink or regenerative option of the servo amplifier.
Read described item of this section carefully and handle the SSCNET III cable with caution.

(1) Minimum bending radius
Make sure to lay the cable with greater radius than the minimum bending radius. Do not press the cable to edges of equipment or others. For the SSCNET III cable, the appropriate length should be selected with due consideration for the dimensions and arrangement of the servo amplifier. When closing the door of the cabinet, pay careful attention to avoid the case that the SSCNET III cable is held down by the door and the cable bend becomes smaller than the minimum bending radius. For the minimum bending radius, refer to section 11.1.2.

(2) Prohibition of vinyl tape use
Migrating plasticizer is used for vinyl tape. Keep the MR-J3BUS_M, and MR-J3BUS_M-A cables away from vinyl tape because the optical characteristic may be affected.

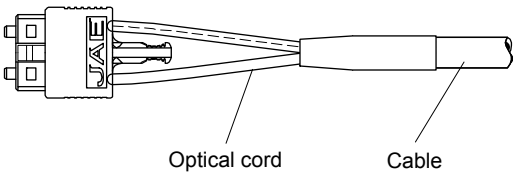

SSCNET III cable	Cord	Cable
MR-J3BUS_M	△	
MR-J3BUS_M-A	△	△
MR-J3BUS_M-B	○	○

△: Phthalate ester plasticizer such as DBP and DOP may affect optical characteristic of the cable.
○: The cord and cable are not basically affected by plasticizer.

(3) Precautions for migrating plasticizer added materials

Generally, soft polyvinyl chloride (PVC), polyethylene resin (PE), and fluorine resin contain non-migrating plasticizer and they do not affect the optical characteristic of the SSCNET III cable. However, some wire sheaths and cable ties that contain migrating plasticizer (phthalate ester) may affect MR-J3BUS_M and MR-J3BUS_M-A cables (plastic).

In addition, the MR-J3BUS_M-B cable (silica glass) is not affected by plasticizer.

A chemical substance may affect its optical characteristic. Therefore, previously check that the cable is not affected by the environment.

(4) Bundle fixing

Fix the cable at the closest part to the connector with bundle material in order to prevent the SSCNET III cable from putting its own weight on the CN1A/CN1B connector of the servo amplifier. The optical cord should be given loose slack to avoid becoming smaller than the minimum bending radius, and it should not be twisted.

When bundling the cable, fix and hold it in position by using cushioning such as sponge or rubber which does not contain migratable plasticizers.

If adhesive tape for bundling the cable is used, fire resistant acetate cloth adhesive tape 570F (Teraoka Seisakusho Co., Ltd) is recommended.

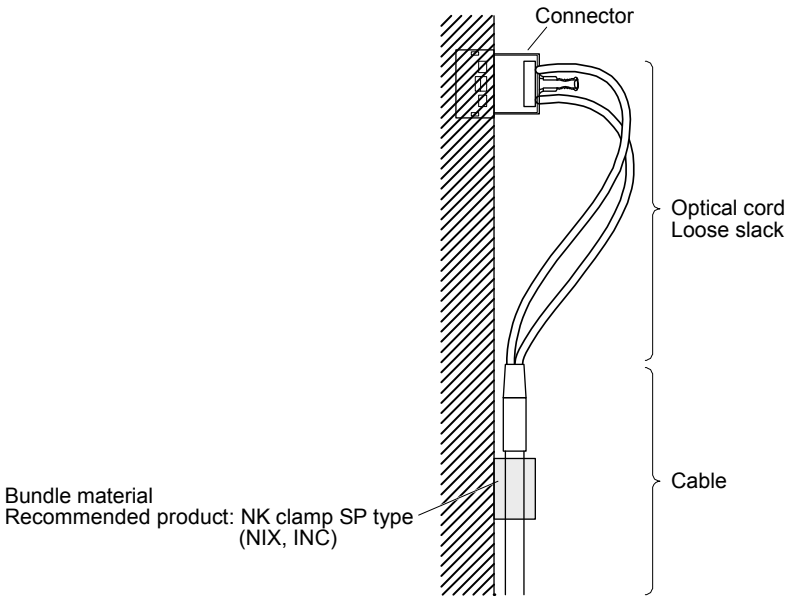

(5) Tension

If tension is added on an optical cable, the increase of transmission loss occurs because of external force which concentrates on the fixing part of the optical fiber or the connecting part of the optical connector. Doing so may cause the breakage of the optical fiber or damage of the optical connector. For cable laying, handle the cable without putting forced tension. For the tension strength, refer to section 11.1.2.

(6) Lateral pressure

If lateral pressure is added on an optical cable, the optical cable itself distorts, the internal optical fiber gets stressed, and then transmission loss will increase. Doing so may cause the breakage of the optical cable. As the same condition also occurs at cable laying, do not tighten up the optical cable with a thing such as nylon band (TY-RAP).

Do not trample it down or tuck it down with the door of the cabinet or others.

(7) Twisting
If optical fiber is twisted, it will become the same stress added condition as when local lateral pressure or bend is added. Consequently, transmission loss increases, and the breakage of the optical fiber may occur.

(8) Disposal
When the optical cable (cord) used for an SSCNET III cable, hydrogen fluoride gas or hydrogen chloride gas which is corrosive and harmful may be generated. For disposal of optical fiber, request for specialized industrial waste disposal services who has incineration facility for disposing hydrogen fluoride gas or hydrogen chloride gas.

2.5 Inspection items

⚠WARNING	●Before starting maintenance and/or inspection, turn off the power and wait for 15 minutes or more until the charge lamp turns off. Otherwise, an electric shock may occur. In addition, when confirming whether the charge lamp is off or not, always confirm it from the front of the servo amplifier. ●To avoid an electric shock, only qualified personnel should attempt inspections. For repair and parts replacement, contact your local sales office.

⚠CAUTION	●Do not perform insulation resistance test on the servo amplifier. Otherwise, it may cause a malfunction. ●Do not disassemble and/or repair the equipment on customer side.

It is recommended that the following points periodically be checked.

(1) Check for loose terminal block screws. Retighten any loose screws.

(2) Check for scratches and cracks of cables and the like. Inspect them periodically according to operating conditions especially when the servo motor is movable.

(3) Check that the connector is securely connected to the servo amplifier.

(4) Check that the wires are not coming out from the connector.

(5) Check for dust accumulation on the servo amplifier.

(6) Check for unusual noise generated from the servo amplifier.

2.6 Parts having service lives

Service lives of the following parts are listed below. However, the service life varies depending on operating methods and environment. If any fault is found in the parts, they must be replaced immediately regardless of their service lives. For parts replacement, please contact your local sales office.

Part name	Life guideline
Smoothing capacitor	10 years
Relay	Number of power-on, forced stop by EM1 (Forced stop 1), and controller forced stop times: 100 000 times
Cooling fan	50,000 hours to 70,000 hours (7 years to 8 years)
Absolute position battery	Refer to section 12.2.

(1) Smoothing capacitor
The characteristic of a smoothing capacitor is deteriorated due to ripple currents, etc. The life of the capacitor greatly depends on ambient temperature and operating conditions. The capacitor will reach the end of its life in 10 years of continuous operation in normal air-conditioned environment (40 ˚C surrounding air temperature or lower).

(2) Relays
Contact faults will occur due to contact wear arisen from switching currents. Relays will reach the end of their lives depending on their power supply capacity when the number of power-on times, number of forced stop times by EM1 (Forced stop 1), and number of controller forced stop times are 100,000 times in total.

(3) Servo amplifier cooling fan
The cooling fan bearings reach the end of their lives in 10,000 hours to 30,000 hours. Normally, therefore, the cooling fan must be replaced in a few years of continuous operation as a guideline. It must also be changed if unusual noise or vibration is found during inspection.
The life indicates under the yearly average ambient temperature of 40 ˚C, free from corrosive gas, flammable gas, oil mist, dust, and dirt.

MEMO

3. SIGNALS AND WIRING

⚠WARNING

- Any person who is involved in wiring should be fully competent to do the work.
- Before wiring, turn off the power and wait for 15 minutes or more until the charge lamp turns off. Otherwise, an electric shock may occur. In addition, when confirming whether the charge lamp is off or not, always confirm it from the front of the servo amplifier.
- Ground the servo amplifier and servo motor securely.
- Do not attempt to wire the servo amplifier and servo motor until they have been installed. Otherwise, it may cause an electric shock.
- The cables should not be damaged, stressed, loaded, or pinched. Otherwise, it may cause an electric shock.
- To avoid an electric shock, insulate the connections of the power supply terminals.

⚠CAUTION

- Before removing the CNP1 connector from MR-JE-40B to MR-JE-100B, disconnect the lead wires of the regenerative resistor from the CNP1 connector.
- Wire the equipment correctly and securely. Otherwise, the servo motor may operate unexpectedly, resulting in injury.
- Connect cables to the correct terminals. Otherwise, a burst, damage, etc. may occur.
- Ensure that polarity (+/-) is correct. Otherwise, a burst, damage, etc. may occur.
- The surge absorbing diode installed to the DC relay for control output should be fitted in the specified direction. Otherwise, the emergency stop and other protective circuits may not operate.

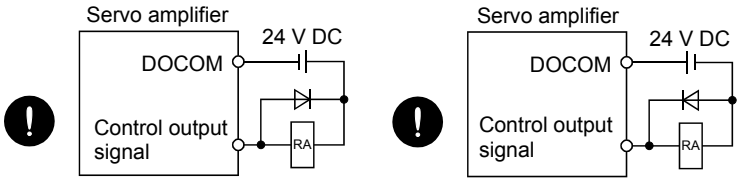

For sink output interface　　For source output interface

- Use a noise filter, etc. to minimize the influence of electromagnetic interference. Electromagnetic interference may be given to the electronic equipment used near the servo amplifier.
- Do not install a power capacitor, surge killer, or radio noise filter (optional FR-BIF) with the power line of the servo motor.
- When using a regenerative resistor, switch power off with the alarm signal. Otherwise, a transistor fault or the like may overheat the regenerative resistor, causing a fire.
- Do not modify the equipment.

⚠CAUTION

●Connect the servo amplifier power output (U, V, and W) to the servo motor power input (U, V, and W) directly. Do not let a magnetic contactor, etc. intervene. Otherwise, it may cause a malfunction.

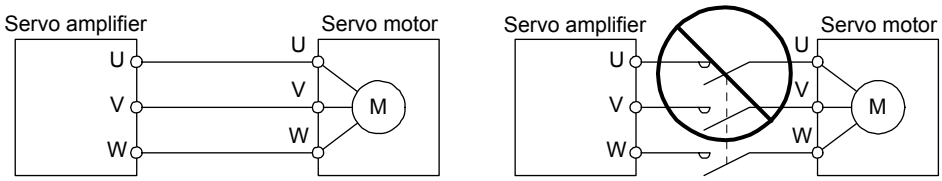

●Connecting a servo motor of the wrong axis to U, V, W, or CN2 of the servo amplifier may cause a malfunction.

3.1 Input power supply circuit

⚠CAUTION

●Always connect a magnetic contactor between the power supply and the power supply (L1, L2, and L3) of the servo amplifier, in order to configure a circuit that shuts down the power supply on the side of the servo amplifier's power supply. If a magnetic contactor is not connected, continuous flow of a large current may cause a fire when the servo amplifier malfunctions.

●Use an alarm to switch power off. Not doing so may cause a fire when a regenerative transistor malfunction or the like may overheat the regenerative resistor.

●Before removing the CNP1 connector from MR-JE-40B to MR-JE-100B, disconnect the lead wires of the regenerative resistor from the CNP1 connector. Not doing so may break the lead wires of the regenerative resistor.

●Check the servo amplifier model, and then input proper voltage to the servo amplifier power supply. If input voltage exceeds the upper limit of the specification, the servo amplifier will break down.

●The servo amplifier has a built-in surge absorber (varistor) to reduce noise and to suppress lightning surge. The varistor can break down due to its aged deterioration. To prevent a fire, use a molded-case circuit breaker or fuse for input power supply.

●Connecting a servo motor of the wrong axis to U, V, W, or CN2 of the servo amplifier may cause a malfunction.

●N- terminal is not a neutral point of the power supply. Incorrect wiring may cause a burst, damage, etc.

POINT

●EM2 has the same function as EM1 in the torque control mode.

●When a 1-phase 200 V AC to 240 V AC power supply is used, the connection destination differs depending on the servo amplifier. Ensure that the connection destination is correct.

Configure the wiring so that the power supply is shut off and the servo-on command is turned off after deceleration to a stop due to an alarm occurring, an enabled servo forced stop, or an enabled controller forced stop. A molded-case circuit breaker (MCCB) must be used with the input cables of the power supply.

(1) For 3-phase 200 V AC to 240 V AC power supply of MR-JE-10B to MR-JE-100B

POINT

- For MR-JE-_B servo amplifiers, the hot line forced stop function is enabled at factory setting. For MR-J4-_B servo amplifiers, the hot line forced stop function is disabled at factory setting.
- If an alarm occurs, the hot line forced stop function outputs hot line forced stop signals to all servo amplifiers before a communication to the controller is cut. Then, servo amplifiers will be in the [AL. E7.1 Controller forced stop warning] state and will decelerate to a stop.
- The hot line forced stop function can be disabled with [Pr. PA27].
- Configure the power supply circuit which turns off magnetic contactors of all servo amplifiers after detection of alarm occurrence on the controller side at alarm occurrence.

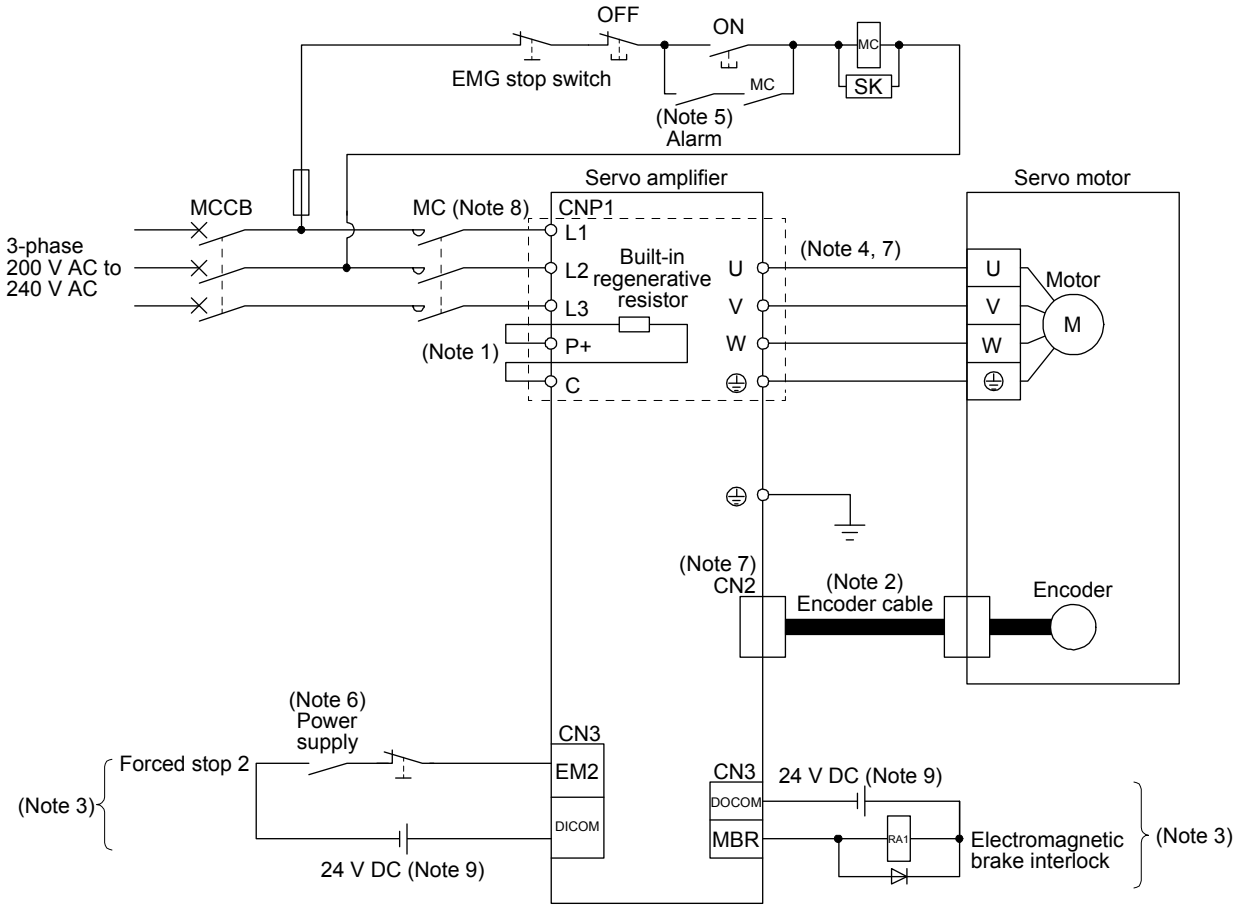

Note 1. MR-JE-40B to MR-JE-100B have a built-in regenerative resistor. (factory-wired) When using the regenerative option, refer to section 11.2.
2. For the encoder cable, use of the option cable is recommended. For cable selection, refer to "HG-KN_/HG-SN_ Servo Motor Instruction Manual".
3. This diagram is for the sink I/O interface. For source I/O interface, refer to section 3.8.3.
4. For connection of servo motor power wires, refer to "HG-KN_/HG-SN_ Servo Motor Instruction Manual".
5. Configure the power supply circuit that turns off the magnetic contactor after an alarm occurs on the controller side.
6. Configure a circuit to turn off EM2 when the power is turned off to prevent an unexpected restart of the servo amplifier.
7. Connecting a servo motor of the wrong axis to U, V, W, or CN2 of the servo amplifier may cause a malfunction.
8. Use a magnetic contactor with an operation delay time (interval since a current is applied to the coil until the contact closes) of 80 ms or shorter. Depending on the power supply voltage and operation pattern, bus voltage can decrease. This can shift the mode to the dynamic brake deceleration during forced stop deceleration. When dynamic brake deceleration is not required, slow the time to turn off the magnetic contactor.
9. The illustration of the 24 V DC power supply is divided between input signal and output signal for convenience. However, they can be configured by one.

(2) For 1-phase 200 V AC to 240 V AC power supply of MR-JE-10B to MR-JE-100B

POINT

- For MR-JE-_B servo amplifiers, the hot line forced stop function is enabled at factory setting. For MR-J4-_B servo amplifiers, the hot line forced stop function is disabled at factory setting.
- If an alarm occurs, the hot line forced stop function outputs hot line forced stop signals to all servo amplifiers before a communication to the controller is cut. Then, servo amplifiers will be in the [AL. E7.1 Controller forced stop warning] state and will decelerate to a stop.
- The hot line forced stop function can be disabled with [Pr. PA27].
- Configure the power supply circuit which turns off magnetic contactors of all servo amplifiers after detection of alarm occurrence on the controller side at alarm occurrence.
- Connect the 1-phase 200 V AC to 240 V AC power supply to L1 and L3. One of the connecting destinations is different from MR-JE-200B Servo Amplifier's.

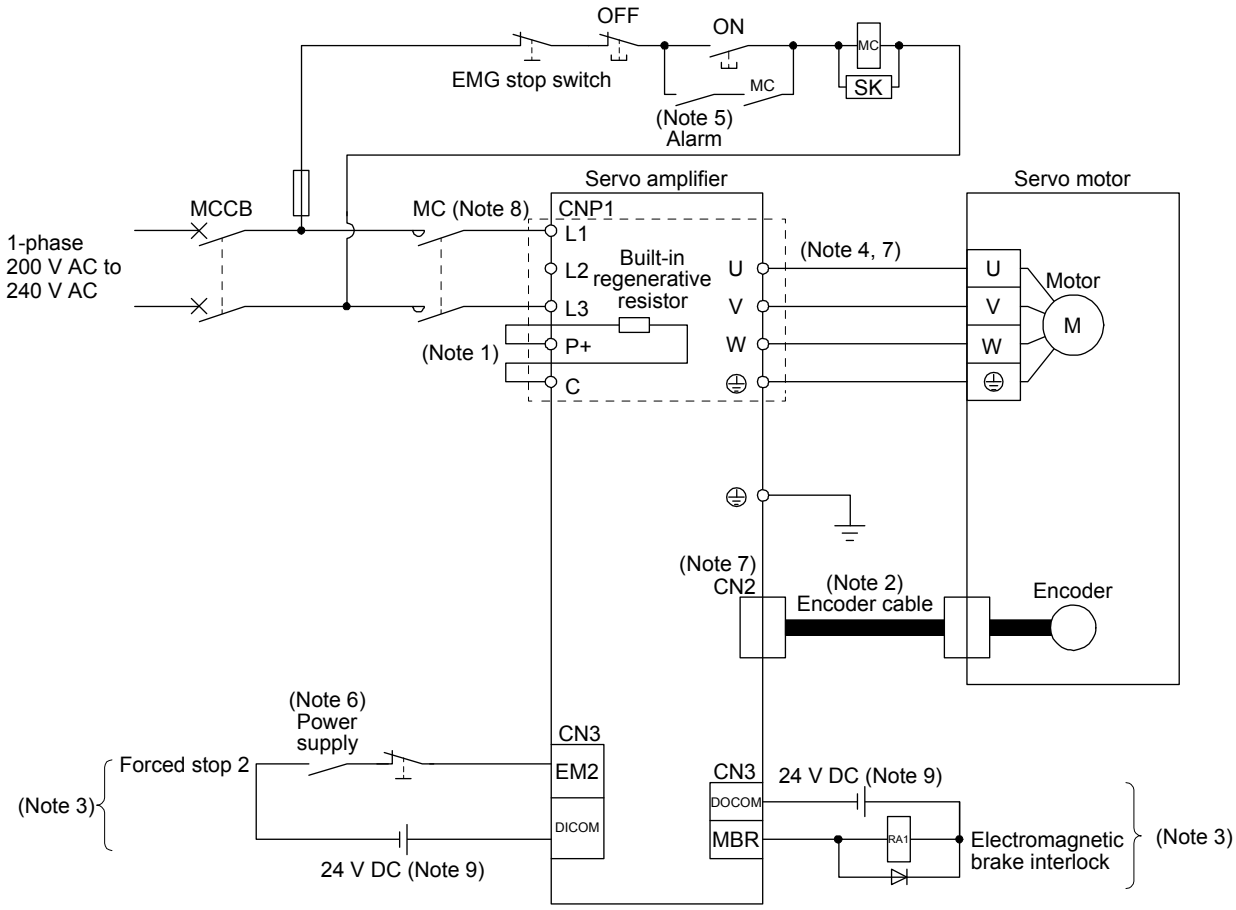

Note 1. MR-JE-40B to MR-JE-100B have a built-in regenerative resistor. (factory-wired) When using the regenerative option, refer to section 11.2.
2. For the encoder cable, use of the option cable is recommended. For cable selection, refer to "HG-KN_/HG-SN_ Servo Motor Instruction Manual".
3. This diagram is for the sink I/O interface. For source I/O interface, refer to section 3.8.3.
4. For connection of servo motor power wires, refer to "HG-KN_/HG-SN_ Servo Motor Instruction Manual".
5. Configure the power supply circuit that turns off the magnetic contactor after an alarm occurs on the controller side.
6. Configure a circuit to turn off EM2 when the power is turned off to prevent an unexpected restart of the servo amplifier.
7. Connecting a servo motor of the wrong axis to U, V, W, or CN2 of the servo amplifier may cause a malfunction.
8. Use a magnetic contactor with an operation delay time (interval since a current is applied to the coil until the contact closes) of 80 ms or shorter. Depending on the power supply voltage and operation pattern, bus voltage can decrease. This can shift the mode to the dynamic brake deceleration during forced stop deceleration. When dynamic brake deceleration is not required, slow the time to turn off the magnetic contactor.
9. The illustration of the 24 V DC power supply is divided between input signal and output signal for convenience. However, they can be configured by one.

(3) For 3-phase 200 V AC to 240 V AC power supply of MR-JE-200B or MR-JE-300B

POINT

- For MR-JE-_B servo amplifiers, the hot line forced stop function is enabled at factory setting. For MR-J4-_B servo amplifiers, the hot line forced stop function is disabled at factory setting.
- If an alarm occurs, the hot line forced stop function outputs hot line forced stop signals to all servo amplifiers before a communication to the controller is cut. Then, servo amplifiers will be in the [AL. E7.1 Controller forced stop warning] state and will decelerate to a stop.
- The hot line forced stop function can be disabled with [Pr. PA27].
- Configure the power supply circuit which turns off magnetic contactors of all servo amplifiers after detection of alarm occurrence on the controller side at alarm occurrence.

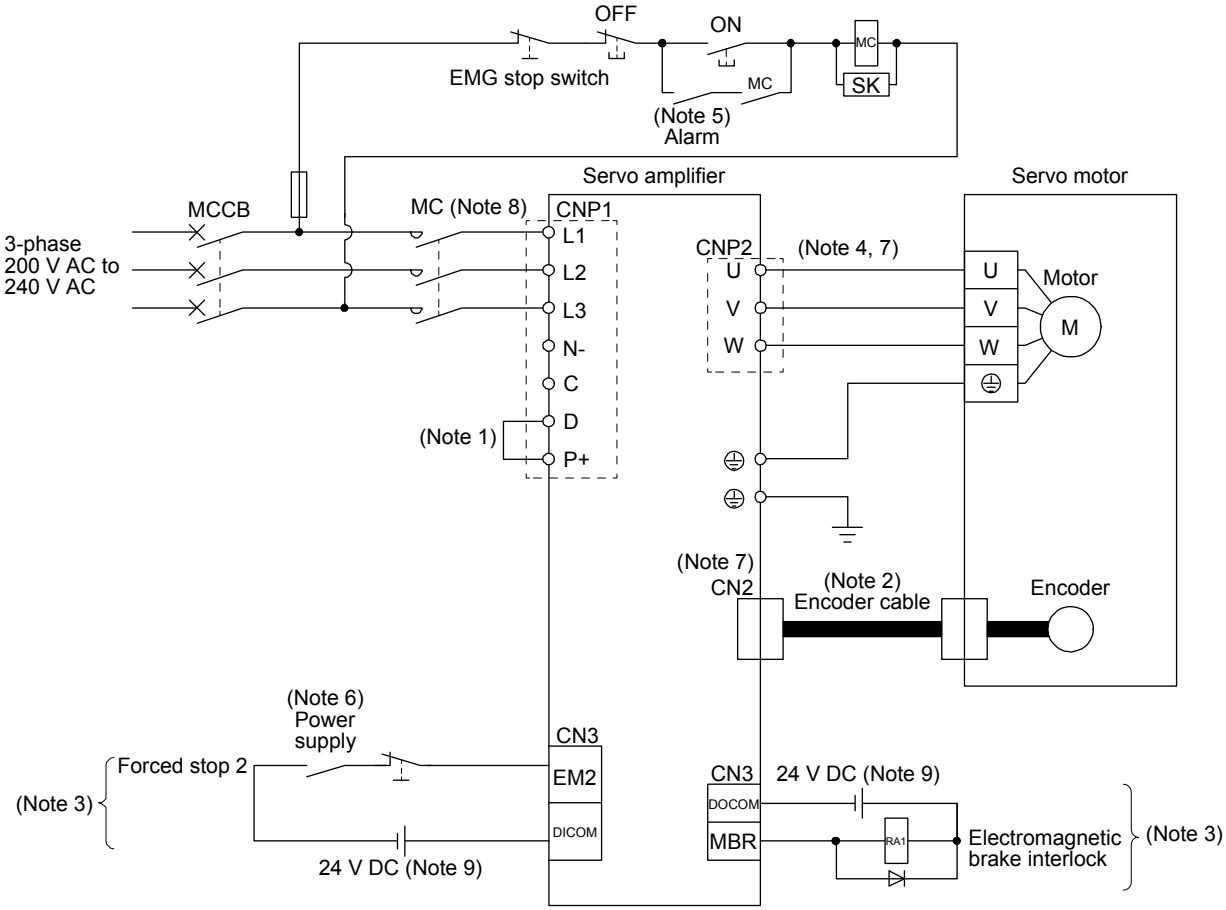

Note 1. Always connect between P+ and D terminals. (factory-wired) When using the regenerative option, refer to section 11.2.
2. For the encoder cable, use of the option cable is recommended. For cable selection, refer to "HG-KN_/HG-SN_ Servo Motor Instruction Manual".
3. This diagram is for the sink I/O interface. For source I/O interface, refer to section 3.8.3.
4. For connection of servo motor power wires, refer to "HG-KN_/HG-SN_ Servo Motor Instruction Manual".
5. Configure the power supply circuit that turns off the magnetic contactor after an alarm occurs on the controller side.
6. Configure a circuit to turn off EM2 when the power is turned off to prevent an unexpected restart of the servo amplifier.
7. Connecting a servo motor of the wrong axis to U, V, W, or CN2 of the servo amplifier may cause a malfunction.
8. Use a magnetic contactor with an operation delay time (interval since a current is applied to the coil until the contact closes) of 80 ms or shorter. Depending on the power supply voltage and operation pattern, bus voltage can decrease. This can shift the mode to the dynamic brake deceleration during forced stop deceleration. When dynamic brake deceleration is not required, slow the time to turn off the magnetic contactor.
9. The illustration of the 24 V DC power supply is divided between input signal and output signal for convenience. However, they can be configured by one.

(4) For 1-phase 200 V AC to 240 V AC power supply of MR-JE-200B

POINT

- For MR-JE-_B servo amplifiers, the hot line forced stop function is enabled at factory setting. For MR-J4-_B servo amplifiers, the hot line forced stop function is disabled at factory setting.
- If an alarm occurs, the hot line forced stop function outputs hot line forced stop signals to all servo amplifiers before a communication to the controller is cut. Then, servo amplifiers will be in the [AL. E7.1 Controller forced stop warning] state and will decelerate to a stop.
- The hot line forced stop function can be disabled with [Pr. PA27].
- Configure the power supply circuit which turns off magnetic contactors of all servo amplifiers after detection of alarm occurrence on the controller side at alarm occurrence.
- Connect the 1-phase 200 V AC to 240 V AC power supply to L1 and L2. One of the connecting destinations is different from MR-JE-100B or less Servo Amplifier's.

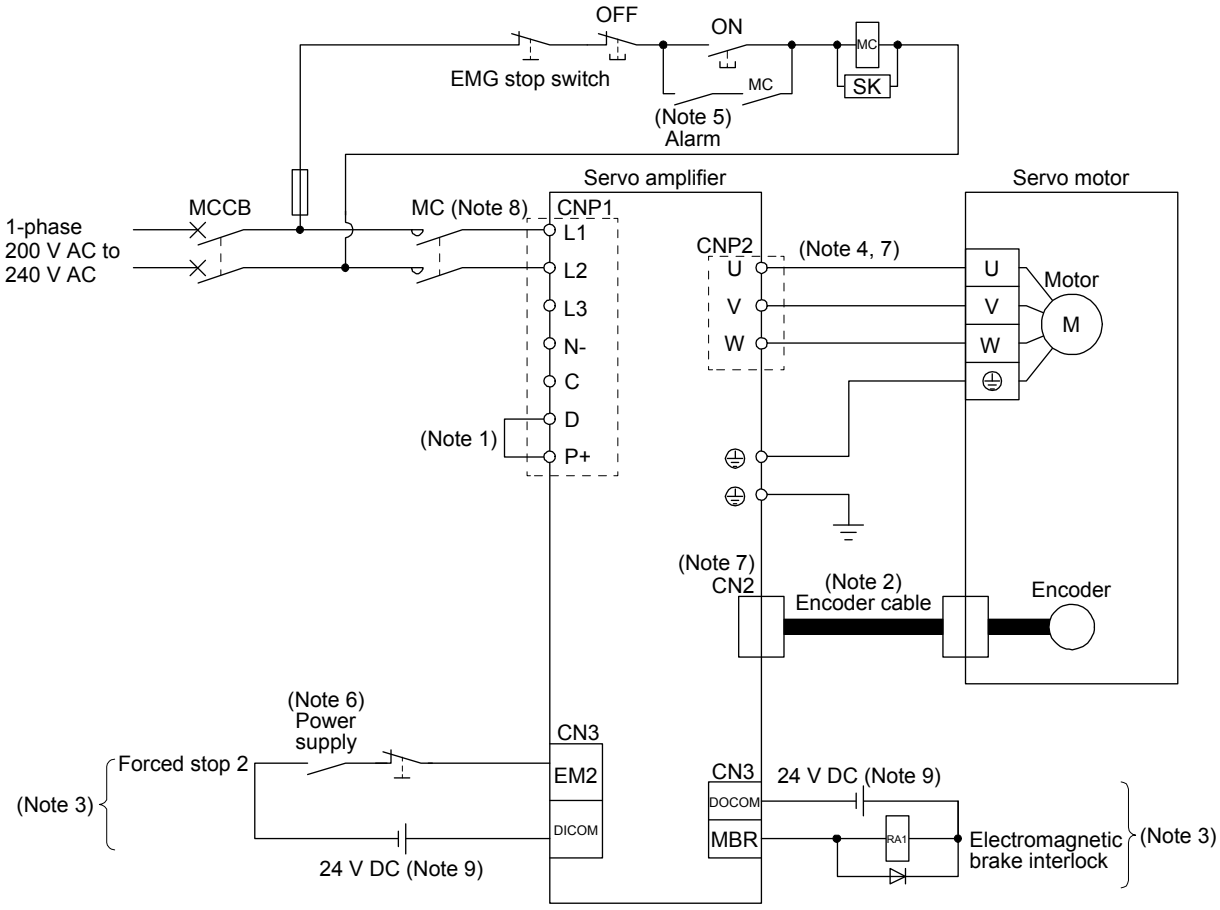

Note 1. Always connect between P+ and D terminals. (factory-wired) When using the regenerative option, refer to section 11.2.
2. For the encoder cable, use of the option cable is recommended. For cable selection, refer to "HG-KN_/HG-SN_ Servo Motor Instruction Manual".
3. This diagram is for the sink I/O interface. For source I/O interface, refer to section 3.8.3.
4. For connection of servo motor power wires, refer to "HG-KN_/HG-SN_ Servo Motor Instruction Manual".
5. Configure the power supply circuit that turns off the magnetic contactor after an alarm occurs on the controller side.
6. Configure a circuit to turn off EM2 when the power is turned off to prevent an unexpected restart of the servo amplifier.
7. Connecting a servo motor of the wrong axis to U, V, W, or CN2 of the servo amplifier may cause a malfunction.
8. Use a magnetic contactor with an operation delay time (interval since a current is applied to the coil until the contact closes) of 80 ms or shorter. Depending on the power supply voltage and operation pattern, bus voltage can decrease. This can shift the mode to the dynamic brake deceleration during forced stop deceleration. When dynamic brake deceleration is not required, slow the time to turn off the magnetic contactor.
9. The illustration of the 24 V DC power supply is divided between input signal and output signal for convenience. However, they can be configured by one.

3.2 I/O signal connection example

POINT
●EM2 has the same function as EM1 in the torque control mode.

3.2.1 For sink I/O interface

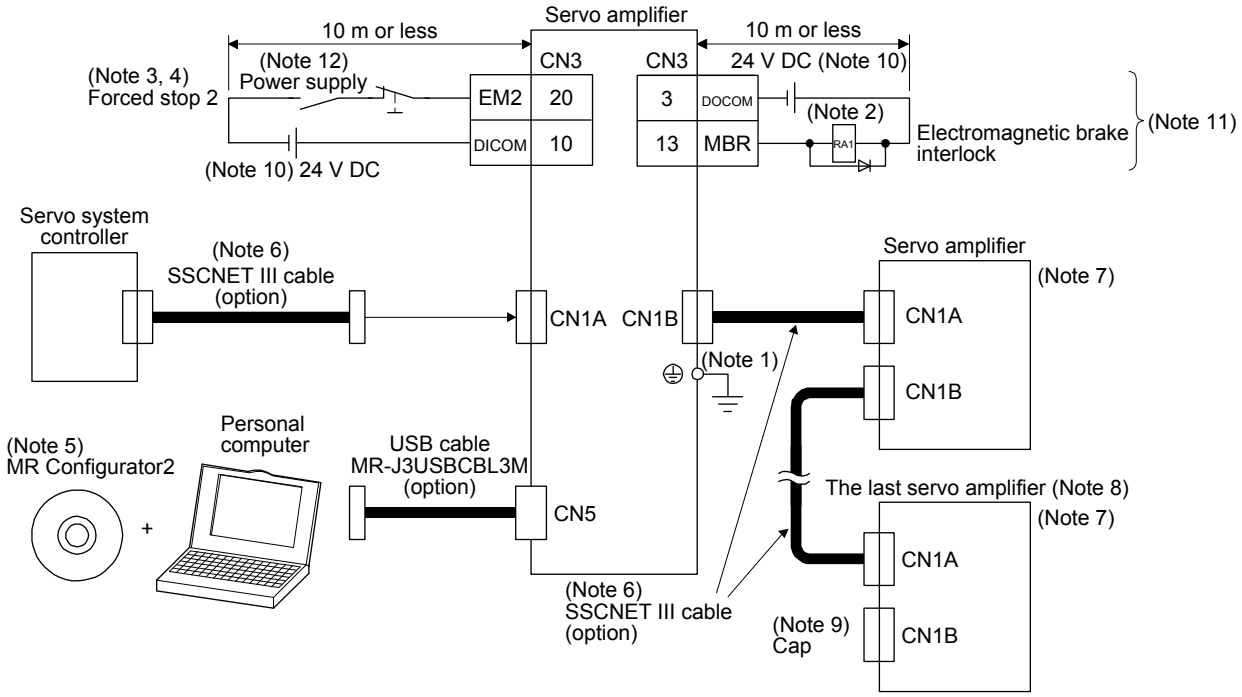

Note 1. To prevent an electric shock, always connect the protective earth (PE) terminal (marked with ⏚) of the servo amplifier to the protective earth (PE) of the cabinet.
2. Connect the diode in the correct direction. If it is connected reversely, the servo amplifier will malfunction and will not output signals, disabling EM2 (Forced stop 2) and other protective circuits.
3. If the controller does not have a forced stop function, always install the forced stop 2 switch (normally closed contact).
4. When starting operation, always turn on EM2 (Forced stop 2). (normally closed contact)
5. Use SW1DNC-MRC2-E. (Refer to section 11.4.)
6. Use SSCNET III cables listed in the following table.

Cable	Cable model	Cable length
Standard cord inside cabinet	MR-J3BUS_M	0.15 m to 3 m
Standard cable outside cabinet	MR-J3BUS_M-A	5 m to 20 m
Long distance cable	MR-J3BUS_M-B	30 m to 50 m

7. The wiring after the second servo amplifier is omitted.
8. Up to 16 axes of servo amplifiers can be connected. The number of connectable axes depends on the controller you use. Refer to section 4.3.1 for setting of axis selection.
9. Make sure to cap the unused CN1B connector.
10. Supply 24 V DC ± 10% to interfaces from outside. The total current capacity of these power supplies must be 100 mA or lower. The current capacity 100 mA is applicable when all I/O signals are used. The current capacity can be decreased by reducing the number of I/O points. Refer to section 3.8.2 that gives the current value necessary for the interface. The illustration of the 24 V DC power supply is divided between input signal and output signal for convenience. However, they can be configured by one.
11. You can change a device assigned to the CN3-13 pin with [Pr. PD07].
12. Configure a circuit to turn off EM2 when the power is turned off to prevent an unexpected restart of the servo amplifier.

3.2.2 For source I/O interface

POINT
●For notes, refer to section 3.2.1.

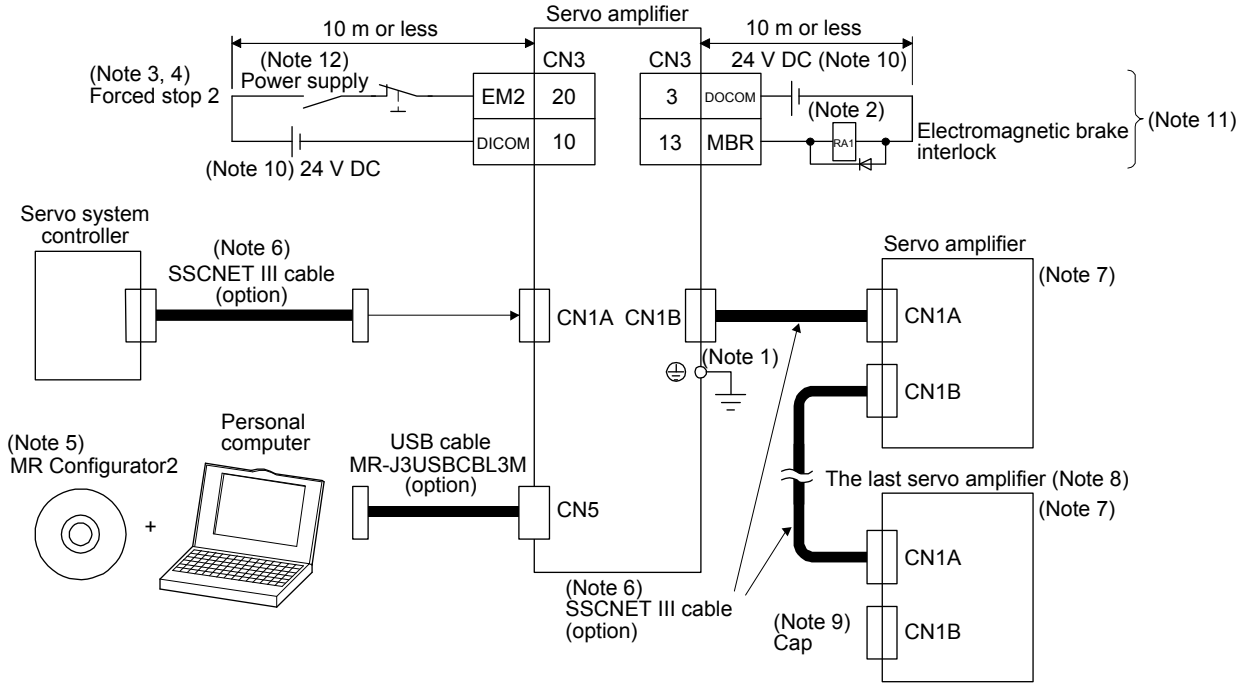

3.3 Explanation of power supply system

3.3.1 Signal explanations

POINT

●For the layout of the connector and terminal block, refer to chapter 9 DIMENSIONS.

<table>
<tr><th>Symbol</th><th>Connection destination (application)</th><th>Description</th></tr>
<tr><td>L1/L2/L3</td><td>Power supply</td><td>Supply the following power to L1, L2, and L3. For 1-phase 200 V AC to 240 V AC of MR-JE-10B to MR-JE-100B, connect the power supply to L1 and L3. Leave L2 open.
For 1-phase 200 V AC to 240 V AC of MR-JE-200B, connect the power supply to L1 and L2. Leave L3 open.
<table>
<tr><th>Servo amplifier / Power supply</th><th>MR-JE-10B to MR-JE-100B</th><th>MR-JE-200B</th><th>MR-JE-300B</th></tr>
<tr><td>3-phase 200 V AC to 240 V AC, 50 Hz/60 Hz</td><td colspan="3">L1/L2/L3</td></tr>
<tr><td>1-phase 200 V AC to 240 V AC, 50 Hz/60 Hz</td><td>L1/L3</td><td>L1/L2</td><td></td></tr>
</table></td></tr>
<tr><td>P+/C/D</td><td>Regenerative option</td><td>1) MR-JE-100B or less
MR-JE-10B to MR-JE-100B do not have D.
When using a servo amplifier built-in regenerative resistor, connect it to P+ and C. (factory-wired)
MR-JE-10B and MR-JE-20B do not have a built-in regenerative resistor.
When using a regenerative option, disconnect wires of the built-in regenerative resistor from P+ and C. Then, connect wires of the regenerative option to P+ and C.
2) MR-JE-200B or more
When using a servo amplifier built-in regenerative resistor, connect P+ and D. (factory-wired)
When using a regenerative option, disconnect P+ and D, and connect the regenerative option to P+ and C.
Refer to section 11.2 for details.</td></tr>
<tr><td>U/V/W</td><td>Servo motor power output</td><td>Connect the terminals to the servo motor power supply terminals (U, V, and W). Connect the servo amplifier power output (U, V, and W) to the servo motor power input (U, V, and W) directly. Do not let a magnetic contactor, etc. intervene. Otherwise, it may cause a malfunction.</td></tr>
<tr><td>N-</td><td></td><td>This terminal is for manufacturer adjustment.
Leave this terminal open.
MR-JE-10B to MR-JE-100B do not have N-.</td></tr>
<tr><td>⏚</td><td>Protective earth (PE)</td><td>Connect this terminal to the grounding terminal of the servo motor and to the protective earth (PE) of the cabinet for grounding.</td></tr>
</table>

3.3.2 Power-on sequence

POINT
●The output signal, etc. may be unstable at power-on.

(1) Power-on procedure

(a) Always use a magnetic contactor for the power supply wiring (L1, L2, and L3) as shown in above section 3.1. Configure the power supply circuit that turns off the magnetic contactor after an alarm occurs on the controller side.

(b) The servo amplifier receives the servo-on command within 3 s to 4 s after the power supply is switched on.
(Refer to (2) of this section.)

(2) Timing chart

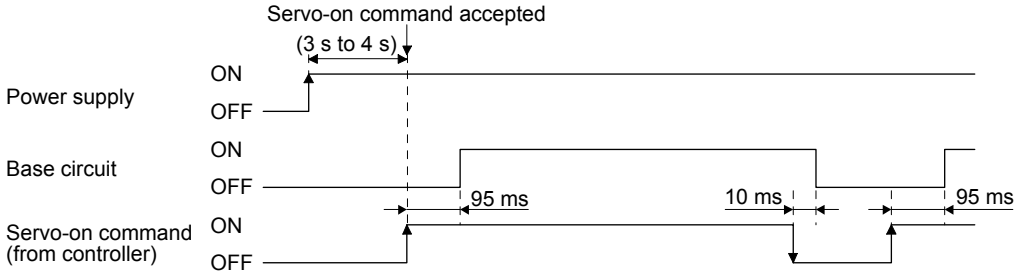

3.3.3 Wiring CNP1 and CNP2

POINT
●For the wire sizes used for wiring, refer to section 11.6.

For the wiring to CNP1 and CNP2, use servo amplifier power connectors packed with the amplifier or optional connectors (refer to section 11.1.1).

(1) Connector

(a) MR-JE-10B to MR-JE-100B

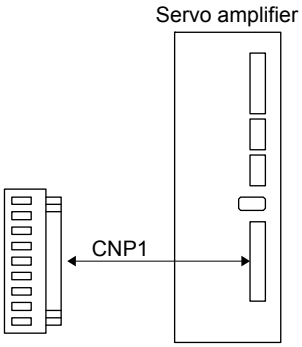

Table 3.1 Connector and applicable wire

Connector	Receptacle assembly	Applicable wire		Stripped length [mm]	Open tool	Manu-facturer
		Size	Insulator OD			
CNP1	09JFAT-SAXGDK-H5.0	AWG 18 to 14	3.9 mm or shorter	9	J-FAT-OT	JST

(b) MR-JE-200B/MR-JE-300B

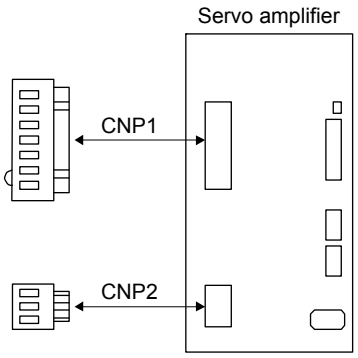

Table 3.2 Connector and applicable wire

Connector	Receptacle assembly	Applicable wire		Stripped length [mm]	Open tool	Manu-facturer
		Size	Insulator OD			
CNP1	07JFAT-SAXGFK-XL	AWG 16 to 10	4.7 mm or shorter	11.5	J-FAT-OT-EXL	JST
CNP2	03JFAT-SAXGFK-XL					

(2) Cable connection procedure

(a) Fabrication on cable insulator

Refer to table 3.1 and 3.2 for stripped length of the cable insulator. The appropriate stripped length of cables depends on their type, etc. Set the length considering their status.

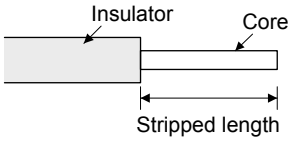

Twist strands lightly and straighten them as follows.

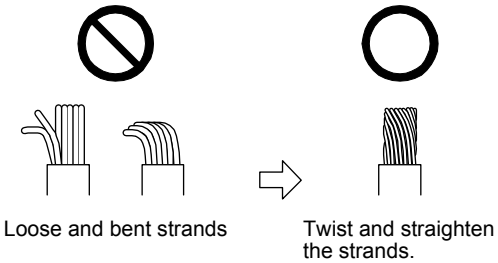

You can also use a ferrule for connection with the connectors. When using a ferrule, select a ferrule and crimping tool listed in the table below.

Servo amplifier	Wire size	Ferrule model (Phoenix Contact)		Crimp terminal (Phoenix Contact)
		For one	For two	
MR-JE-10B to MR-JE-100B	AWG 16	AI1.5-10BK	AI-TWIN2 × 1.5-10BK	CRIMPFOX-ZA3
	AWG 14	AI2.5-10BU		
MR-JE-200B to MR-JE-300B	AWG 16	AI1.5-10BK	AI-TWIN2 × 1.5-10BK	
	AWG 14	AI2.5-10BU	AI-TWIN2 × 2.5-10BU	
	AWG 12	AI4-10GY		

(b) Inserting wire

Insert the open tool as follows and push down it to open the spring. While the open tool is pushed down, insert the stripped wire into the wire insertion hole. Check the insertion depth so that the wire insulator does not get caught by the spring.

Release the open tool to fix the wire. Pull the wire lightly to confirm that the wire is surely connected.

The following shows a connection example of the CNP2 connector for 2 kW and 3 kW.

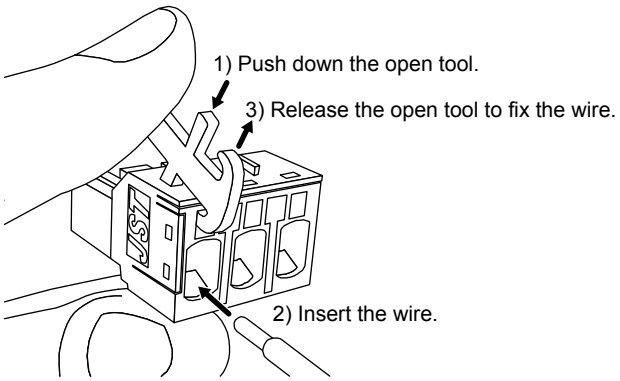

3.4 Connectors and pin assignment

POINT

- The pin assignment of the connectors is as viewed from the cable connector wiring section.
- For the CN3 connector, securely connect the external conductor of the shielded cable to the ground plate and fix it to the connector shell.

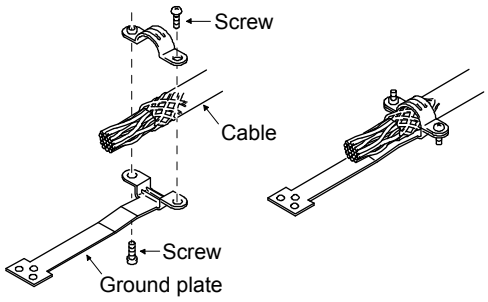

The servo amplifier front view shown is that of the MR-JE-40B or less. Refer to chapter 9 DIMENSIONS for the appearances and connector layouts of the other servo amplifiers.

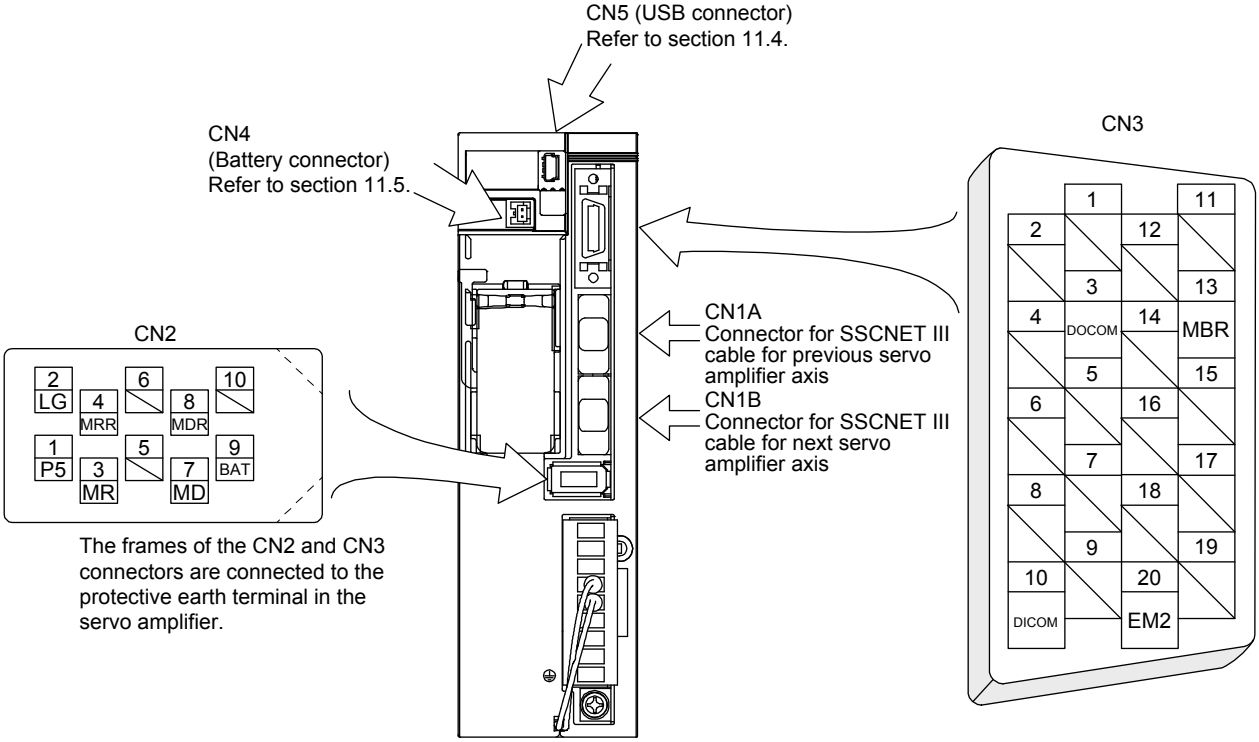

3.5 Signal (device) explanations

For the I/O interfaces (symbols in I/O division column in the table), refer to section 3.8.2.
The pin numbers in the connector pin number column are those in the initial status.

3.5.1 Input device

<table>
<tr><th>Device</th><th>Symbol</th><th>Connector pin number</th><th>Function and application</th><th>I/O division</th></tr>
<tr><td>Forced stop 2</td><td>EM2</td><td>CN3-20</td><td>Turn off EM2 (open between commons) to decelerate the servo motor to a stop with commands.
Turn EM2 on (short between commons) in the forced stop state to reset that state.
Set [Pr. PA04] to "2 1 _ _" to disable EM2.
The following shows the setting of [Pr. PA04].
<table>
<tr><th rowspan="2">[Pr. PA04] setting</th><th rowspan="2">EM2/EM1</th><th colspan="2">Deceleration method</th></tr>
<tr><th>EM2 or EM1 is off</th><th>Alarm occurred</th></tr>
<tr><td>0 0 _ _</td><td>EM1</td><td>MBR (Electromagnetic brake interlock) turns off without the forced stop deceleration.</td><td>MBR (Electromagnetic brake interlock) turns off without the forced stop deceleration.</td></tr>
<tr><td>2 0 _ _</td><td>EM2</td><td>MBR (Electromagnetic brake interlock) turns off after the forced stop deceleration.</td><td>MBR (Electromagnetic brake interlock) turns off after the forced stop deceleration.</td></tr>
<tr><td>0 1 _ _</td><td>Not using EM2 or EM1</td><td></td><td>MBR (Electromagnetic brake interlock) turns off without the forced stop deceleration.</td></tr>
<tr><td>2 1 _ _</td><td>Not using EM2 or EM1</td><td></td><td>MBR (Electromagnetic brake interlock) turns off after the forced stop deceleration.</td></tr>
</table>
EM2 and EM1 are mutually exclusive.
Note that EM2 has the same function as EM1 in the torque control mode.</td><td>DI-1</td></tr>
<tr><td>Forced stop 1</td><td>EM1</td><td>(CN3-20)</td><td>When using EM1, set [Pr. PA04] to "0 0 _ _" to enable EM1.
Turn EM1 off (open between commons) to bring the motor to a forced stop state. The base circuit is shut off, and the dynamic brake is operated and decelerates the servo motor to a stop.
Turn EM1 on (short between commons) in the forced stop state to reset that state.
Set [Pr. PA04] to "0 1 _ _" to disable EM1.</td><td>DI-1</td></tr>
</table>

3.5.2 Output device

(1) Output device pin

The following shows the output device pins and parameters for assigning devices.

Connector pin number	Parameter	Initial device	I/O division
CN3-13	[Pr. PD07]	MBR	DO-1

(2) Output device explanations

Device	Symbol	Function and application
Electromagnetic brake interlock	MBR	When using the device, set operation delay time of the electromagnetic brake in [Pr. PC02]. When a servo-off status or alarm occurs, MBR will turn off.
Malfunction	ALM	When the protective circuit is activated to shut off the base circuit, ALM will turn off. When an alarm does not occur, ALM will turn on after 2.5 s to 3.5 s after power-on.
In-position	INP	When the number of droop pulses is in the in-position range, INP will turn on. The in-position range can be changed using [Pr. PA10]. When the in-position range is increased, INP may be on during low-speed rotation. The device cannot be used in the speed control mode or torque control mode or for continuous operation to torque control mode.
Ready	RD	Enabling servo-on to make the servo amplifier ready to operate will turn on RD.
Speed reached	SA	SA will turn off during servo-off. When the servo motor speed reaches the following range, SA will turn on. Preset speed ± ((Preset speed × 0.05) + 20) r/min When the preset speed is 20 r/min or slower, SA always turns on. The device cannot be used in the position control mode and torque control mode.
Limiting speed	VLC	When the speed reaches the speed limit value in the torque control mode, VLC will turn on. When the servo is off, TLC will be turned off. The device cannot be used in the position control mode and speed control mode.
Zero speed detection	ZSP	ZSP turns on when the servo motor speed is zero speed (50 r/min) or slower. Zero speed can be changed with [Pr. PC07]. 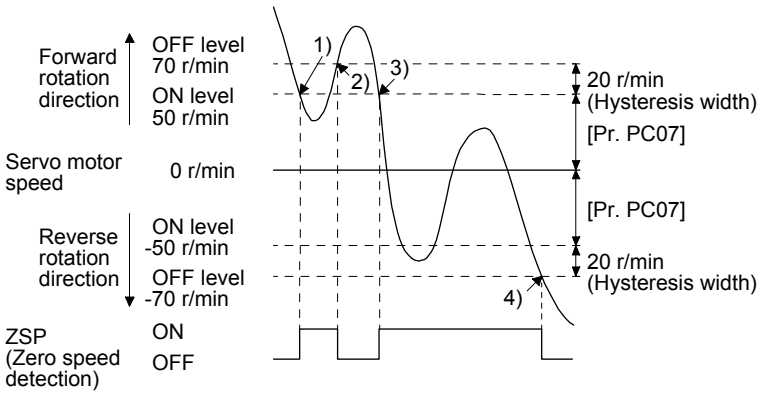 ZSP will turn on when the servo motor is decelerated to 50 r/min (at 1)), and will turn off when the servo motor is accelerated to 70 r/min again (at 2)). ZSP will turn on when the servo motor is decelerated again to 50 r/min (at 3)), and will turn off when the servo motor speed has reached -70 r/min (at 4)). The range from the point when the servo motor speed has reached on level, and ZSP turns on, to the point when it is accelerated again and has reached off level is called hysteresis width. Hysteresis width is 20 r/min for this servo amplifier.

Device	Symbol	Function and application
Limiting torque	TLC	When the torque reaches the torque limit value during torque generation, TLC will turn on. When the servo is off, TLC will be turned off. This device cannot be used in the torque control mode.
Warning	WNG	When a warning has occurred, WNG turns on. When a warning is not occurring, turning on the power will turn off WNG after 2.5 s to 3.5 s.
Battery warning	BWNG	BWNG turns on when [AL. 92 Battery cable disconnection warning] or [AL. 9F Battery warning] has occurred. When the battery warning is not occurring, turning on the power will turn off BWNG after 2.5 s to 3.5 s.
Variable gain selection	CDPS	CDPS will turn on during variable gain.
Absolute position undetermined	ABSV	ABSV turns on when the absolute position is undetermined. The device cannot be used in the speed control mode and torque control mode.
During tough drive	MTTR	When a tough drive is "Enabled" in [Pr. PA20], activating the instantaneous power failure tough drive will turn on MTTR.

3.5.3 Power supply

Signal name	Symbol	Connector pin number	Function and application
Digital I/F power supply input	DICOM	CN3-10	Input 24 V DC (24 V DC ± 10% 100 mA) for I/O interface. The power supply capacity changes depending on the number of I/O interface points to be used. For sink interface, connect + of 24 V DC external power supply. For source interface, connect - of 24 V DC external power supply.
Digital I/F common	DOCOM	CN3-3	Common terminal of input signal such as EM2 of the servo amplifier. This terminal is separated from LG. For sink interface, connect - of 24 V DC external power supply. For source interface, connect + of 24 V DC external power supply.
Shield	SD	Plate	Connect the external conductor of the shielded wire.

3.6 Forced stop deceleration function

POINT

- When alarms not related to the forced stop function occur, control of motor deceleration cannot be guaranteed. (Refer to chapter 8.)
- When SSCNET III/H communication brake occurs, forced stop deceleration will operate. (Refer to section 3.7.1 (3).)
- In the torque control mode, the forced stop deceleration function cannot be used.

3.6.1 Forced stop deceleration function

When EM2 is turned off, dynamic brake will start to stop the servo motor after forced stop deceleration. During this sequence, the display shows [AL. E6 Servo forced stop warning].
During normal operation, do not use EM2 (Forced stop 2) to alternate stop and drive. The servo amplifier life may be shortened.

(1) Connection diagram

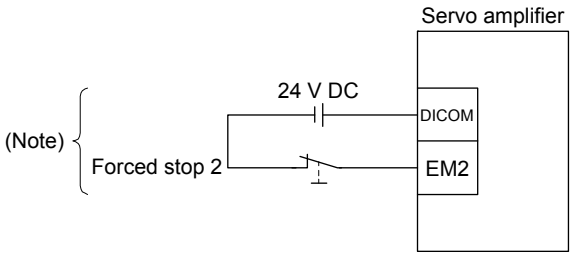

Note. This diagram is for the sink I/O interface. For source I/O interface, refer to section 3.8.3.

(2) Timing chart

When EM2 (Forced stop 2) turns off, the motor will decelerate according to [Pr. PC24 Forced stop deceleration time constant]. Once the motor speed is below [Pr. PC07 Zero speed] after completion of the deceleration command, base power is cut and the dynamic brake activates.

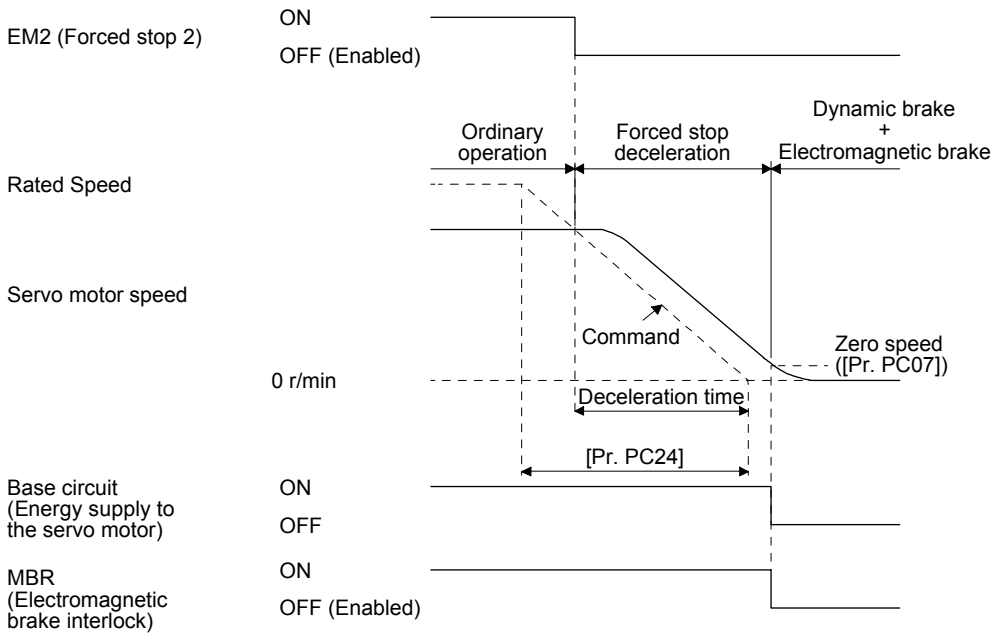

3.6.2 Base circuit shut-off delay time function

The base circuit shut-off delay time function is used to prevent a vertical axis from dropping at a forced stop (EM2 goes off), alarm occurrence, or SSCNET III/H communication brake due to delay time of the electromagnetic brake. Set the time from MBR (Electromagnetic brake interlock) off to base circuit shut-off with [Pr. PC02].

(1) Timing chart

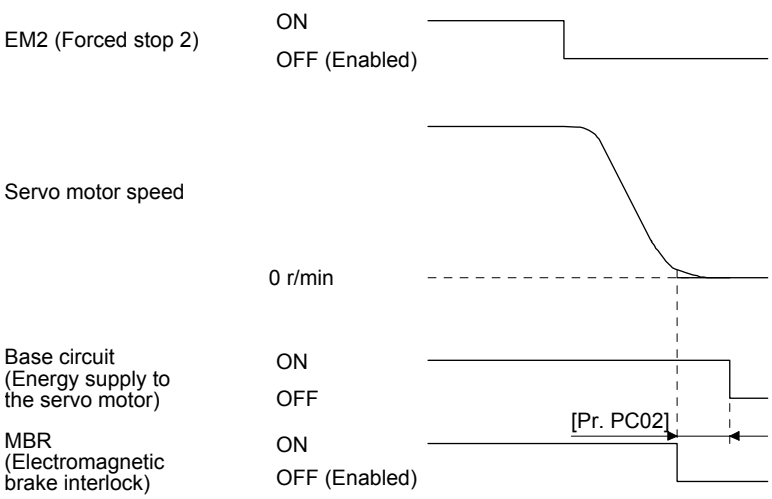

When EM2 (Forced stop 2) turns off or an alarm occurs during driving, the servo motor will decelerate based on the deceleration time constant. MBR (Electromagnetic brake interlock) will turn off, and then after the delay time set in [Pr. PC02], the servo amplifier will be base circuit shut-off status.

(2) Adjustment

While the servo motor is stopped, turn off EM2 (Forced stop 2), adjust the base circuit shut-off delay time in [Pr. PC02], and set the value to approximately 1.5 times of the smallest delay time in which the servo motor shaft does not freefall.

3.6.3 Vertical axis freefall prevention function

The vertical axis freefall prevention function prevents machine damage by pulling up the shaft slightly like the following case.
When the servo motor is used for operating vertical axis, the servo motor electromagnetic brake and the base circuit shut-off delay time function prevent dropping axis at forced stop. However, the functions may not prevent dropping axis a few μm due to the backlash of the servo motor electromagnetic brake.
The vertical axis freefall prevention function is enabled with the following conditions.

- Other than "0" is set to [Pr. PC31 Vertical axis freefall prevention compensation amount].
- EM2 (Forced stop 2) turns off, an alarm occurs, or SSCNET III/H communication brake occurs while the servo motor speed is zero speed or slower.
- The base circuit shut-off delay time function is enabled.

(1) Timing chart

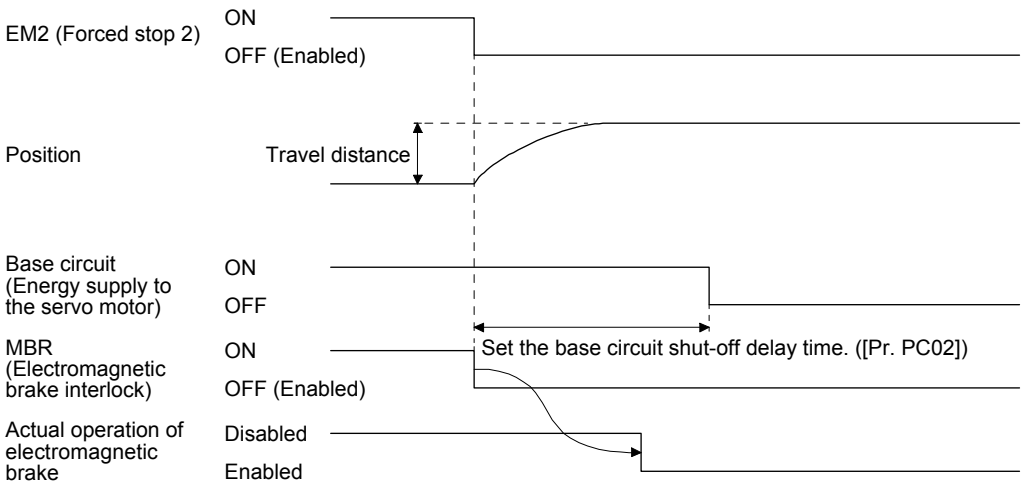

(2) Adjustment

- Set the freefall prevention compensation amount in [Pr. PC31].
- While the servo motor is stopped, turn off the EM2 (Forced stop 2). Adjust the base circuit shut-off delay time in [Pr. PC02] in accordance with the travel distance ([Pr. PC31]). Adjust it considering the freefall prevention compensation amount by checking the servo motor speed, torque ripple, etc.

3.6.4 Residual risks of the forced stop function (EM2)

(1) The forced stop function is not activated by alarms that activate the dynamic brake when the alarms occur.

(2) When an alarm that activates the dynamic brake during forced stop deceleration occurs, the braking distance until the servo motor stops will be longer than that of normal forced stop deceleration without the dynamic brake.

3.7 Alarm occurrence timing chart

⚠CAUTION	●When an alarm has occurred, remove its cause, make sure that the operation signal is not being input, ensure safety, and reset the alarm before restarting operation.

POINT
●In the torque control mode, the forced stop deceleration function cannot be used.

To deactivate the alarm, cycle the power or give the error reset or CPU reset command from the servo system controller. However, the alarm cannot be deactivated unless its cause is removed.

3.7.1 When you use the forced stop deceleration function

POINT
●To enable the function, set "2 _ _ _ (initial value)" in [Pr. PA04].

(1) When the forced stop deceleration function is enabled

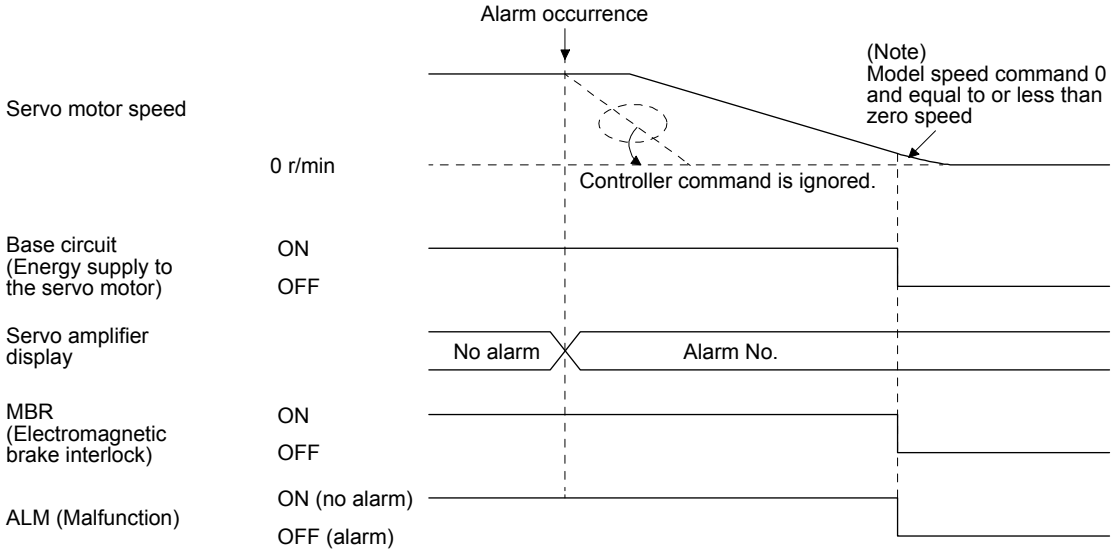

Note. The model speed command is a speed command generated in the servo amplifier for forced stop deceleration of the servo motor.

(2) When the forced stop deceleration function is not enabled

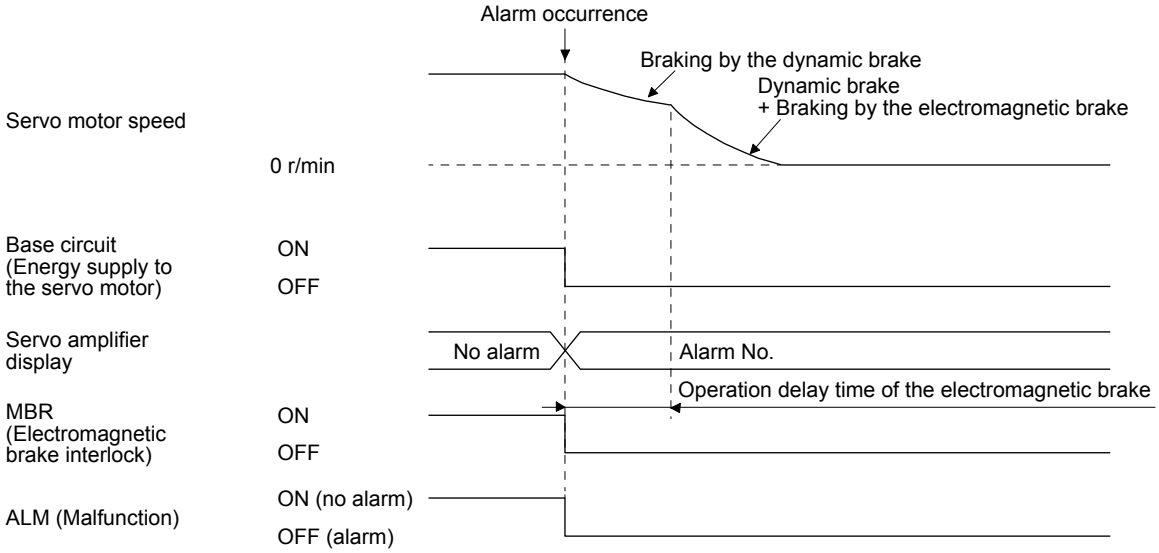

(3) When SSCNET III/H communication brake occurs
The dynamic brake may operate depending on the communication shut-off status.

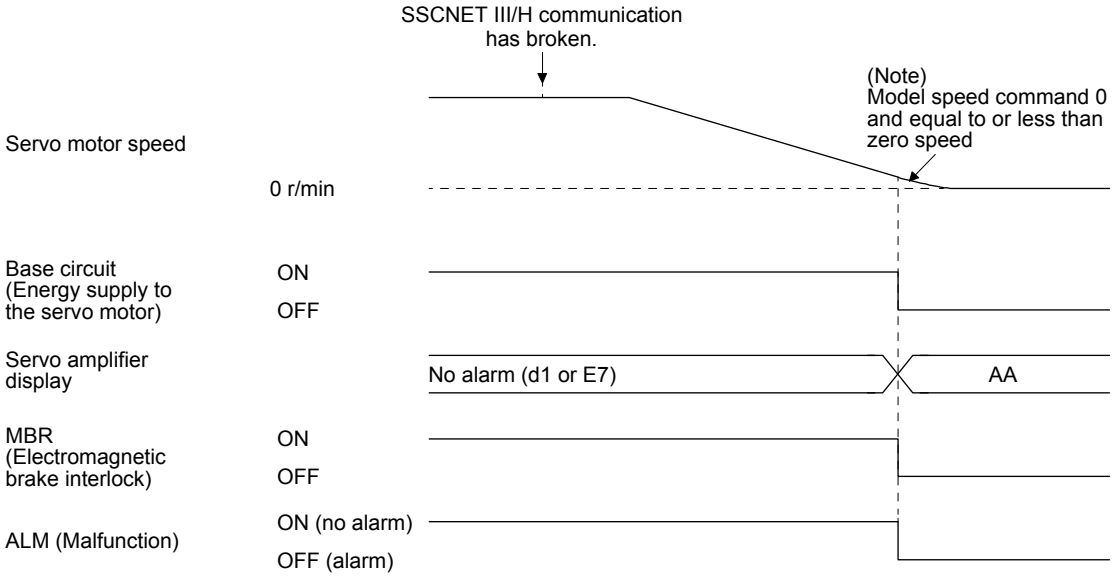

Note. The model speed command is a speed command generated in the servo amplifier for forced stop deceleration of the servo motor.

3.7.2 When you do not use the forced stop deceleration function

POINT
●To disable the function, set "0 _ _ _" in [Pr. PA04].

The timing chart that shows the servo motor condition when an alarm or SSCNET III/H communication brake occurs is the same as section 3.7.1 (2).

3.7.3 Hot line forced stop function

POINT

- When the power supply of the servo amplifier is shut off during deceleration to a stop by a hot line forced stop signal, the servo motor will be stopped with the dynamic brake.
- For using the hot line forced stop function with MR-JE-_B servo amplifier and MR-J4-_B servo amplifier together, refer to appendix 9 for the hot line forced stop function of MR-J4-_B servo amplifiers.

(1) Summary

The hot line forced stop function enables all servo amplifiers to decelerate to a stop and them to stop safely if an alarm occurs in a system configuration using MR-JE-_B servo amplifiers.
Since the power supply of the MR-JE-_B servo amplifier is commonly used for main circuit and control circuit power supplies, if the power supply is shut off at occurrence of an alarm, servo amplifiers in which the alarm occurred and later cannot communicate with the controller. Thus, if an alarm occurs, the function outputs hot line forced stop signals to all servo amplifiers before a communication to the controller is cut. Then, servo amplifiers will be in the [AL. E7.1 Controller forced stop warning] state and will be stopped safely. Also, the function can be disabled with a parameter.

(2) Parameter setting

The hot line forced stop function is enabled at factory setting. Setting "_ _ _ 1" in [Pr. PA27] disables the function.

(3) Operation description

If an alarm occurs in the second axis servo amplifier in a 4-axis system configuration, the operation will be as follows.

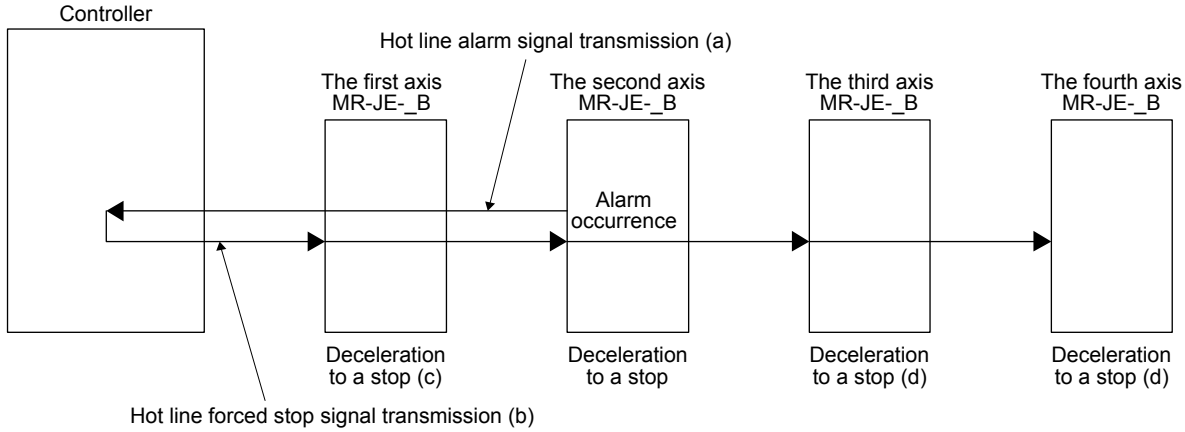

(a) The servo amplifier in which an alarm occurs transmits the hot line alarm signal to the controller.

(b) Upon receipt of a hot line alarm signal, the controller transmits hot line forced stop signals to all servo amplifiers.

(c) Upon receipt of a hot line forced stop signal from the controller, [AL. E7.1 Controller forced stop warning] will occur, and normally operating servo amplifiers will decelerate to a stop. "E7.1" will be shown on the display of the servo amplifier.

(d) When the power supply of a servo amplifier in which an alarm occurred is shut off, subsequent servo amplifiers will decelerate to a stop, and the controller will be in a non-connection state. "AA" will be shown on the display of the servo amplifier.

(4) Timing chart

(a) When the hot line forced stop function is enabled

1) If an alarm that leads to a deceleration to a stop occurs in the second axis servo amplifier, and then the power supply is off

To clear [AL. E7.1 Controller forced stop warning], give the error reset command from the controller.

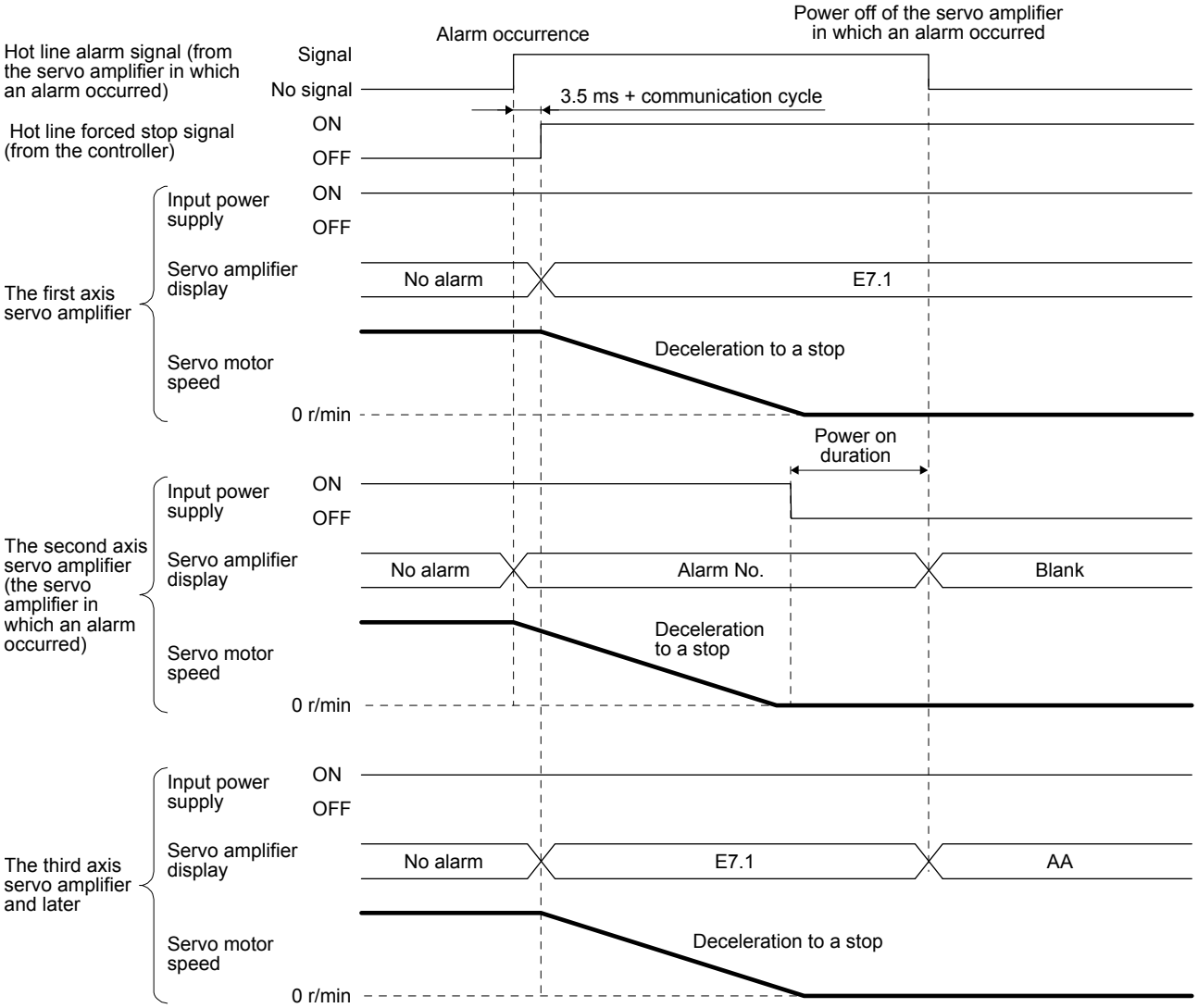

2) If an alarm that stops the servo motor with the dynamic brake occurs in the second axis servo amplifier, and then the power supply is off
To clear [AL. E7.1 Controller forced stop warning], give the error reset command from the controller.

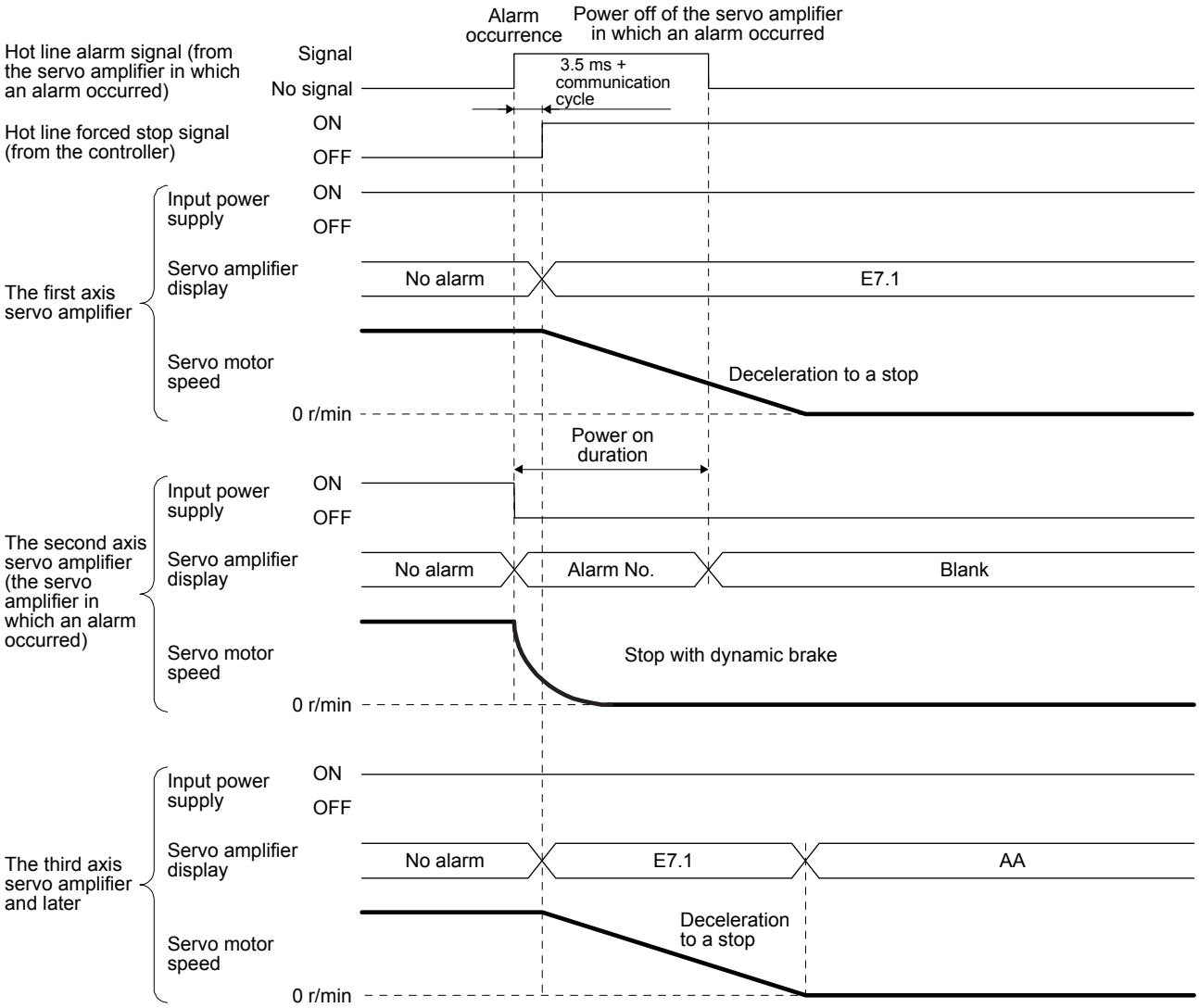

3) When the power of the second axis servo amplifier is turned off

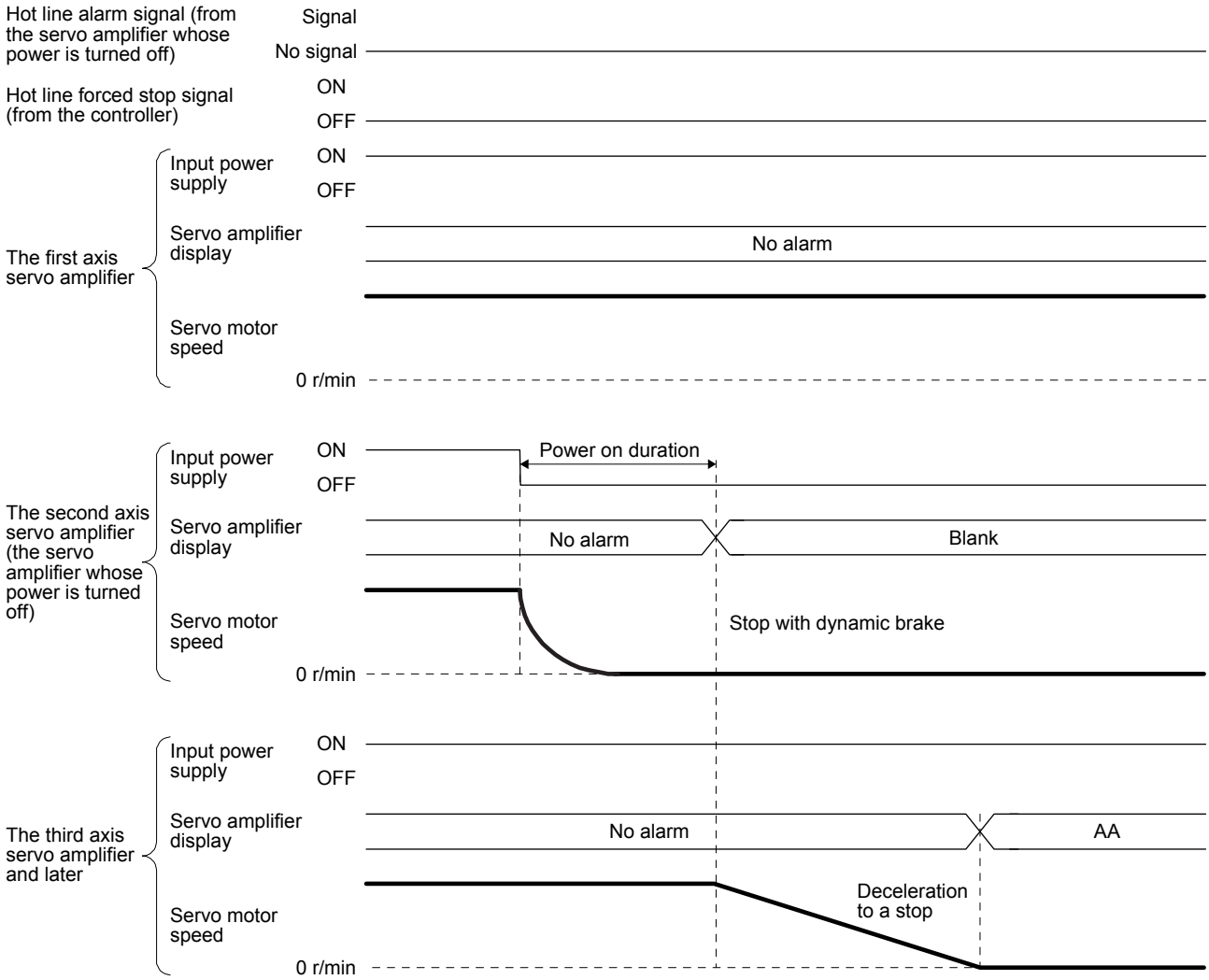

4) When power supplies of all servo amplifiers are turned off

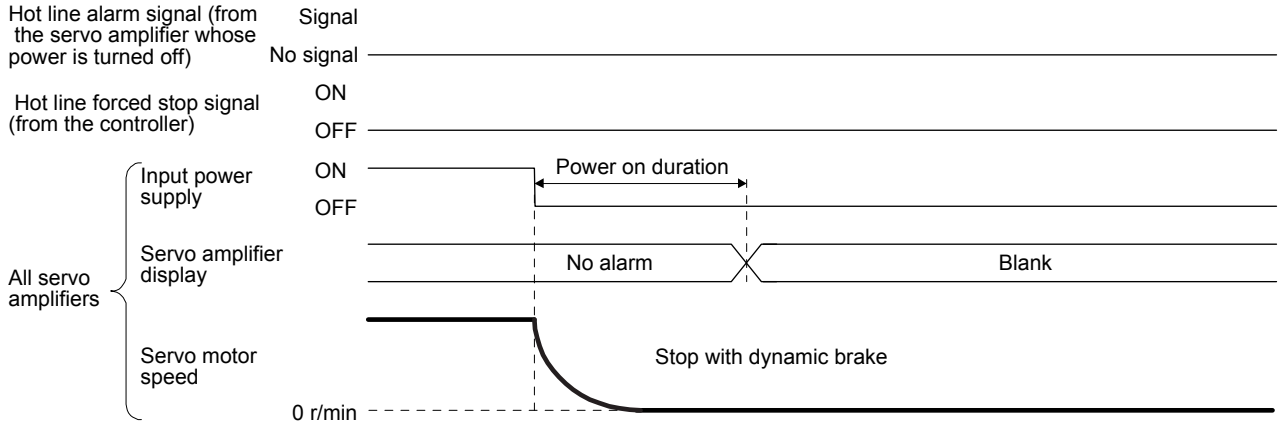

(b) When the hot line forced stop function is disabled

1) If an alarm that leads to a deceleration to a stop occurs in the second axis servo amplifier, and then the power supply is off

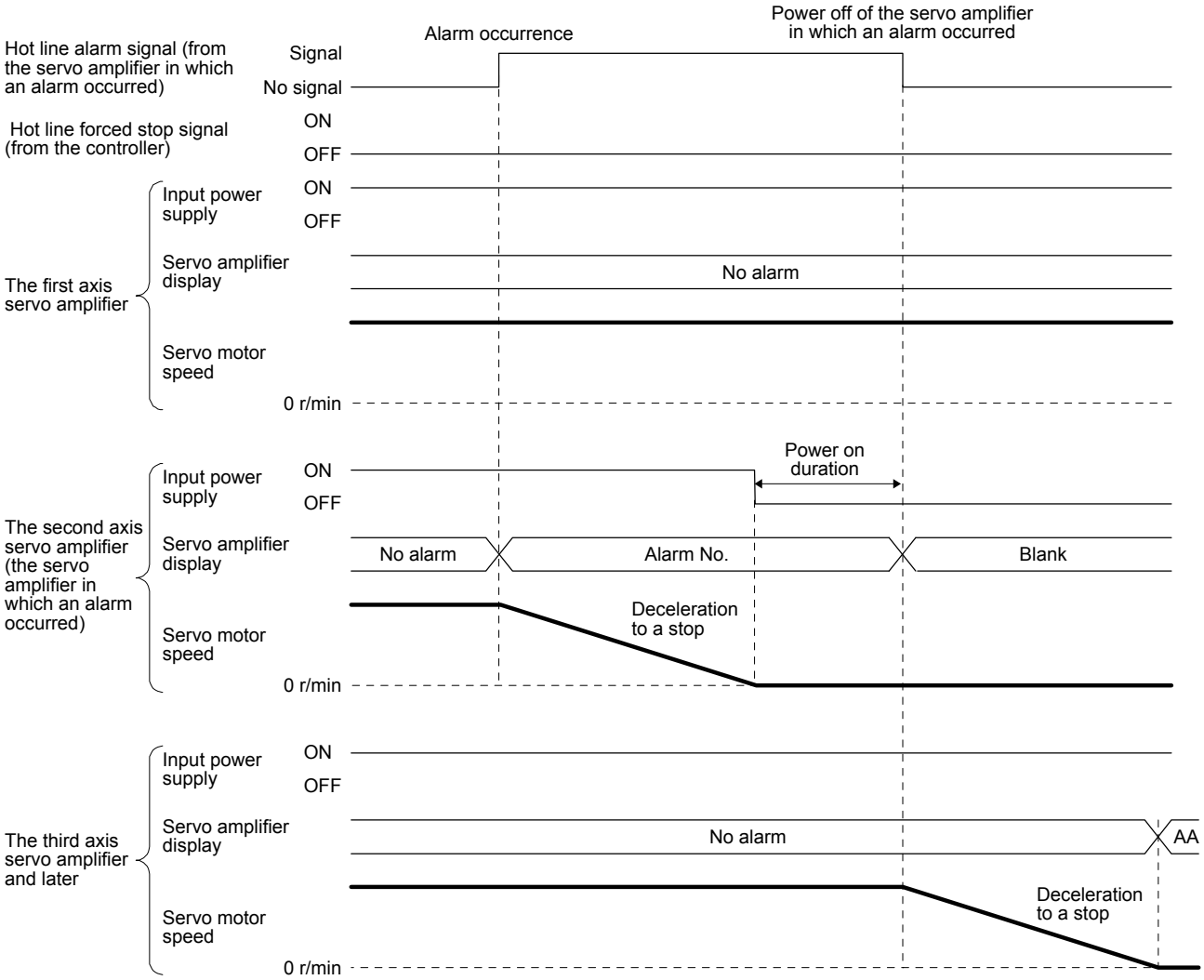

2) If an alarm that stops the servo motor with the dynamic brake occurs in the second axis servo amplifier, and then the power supply is off

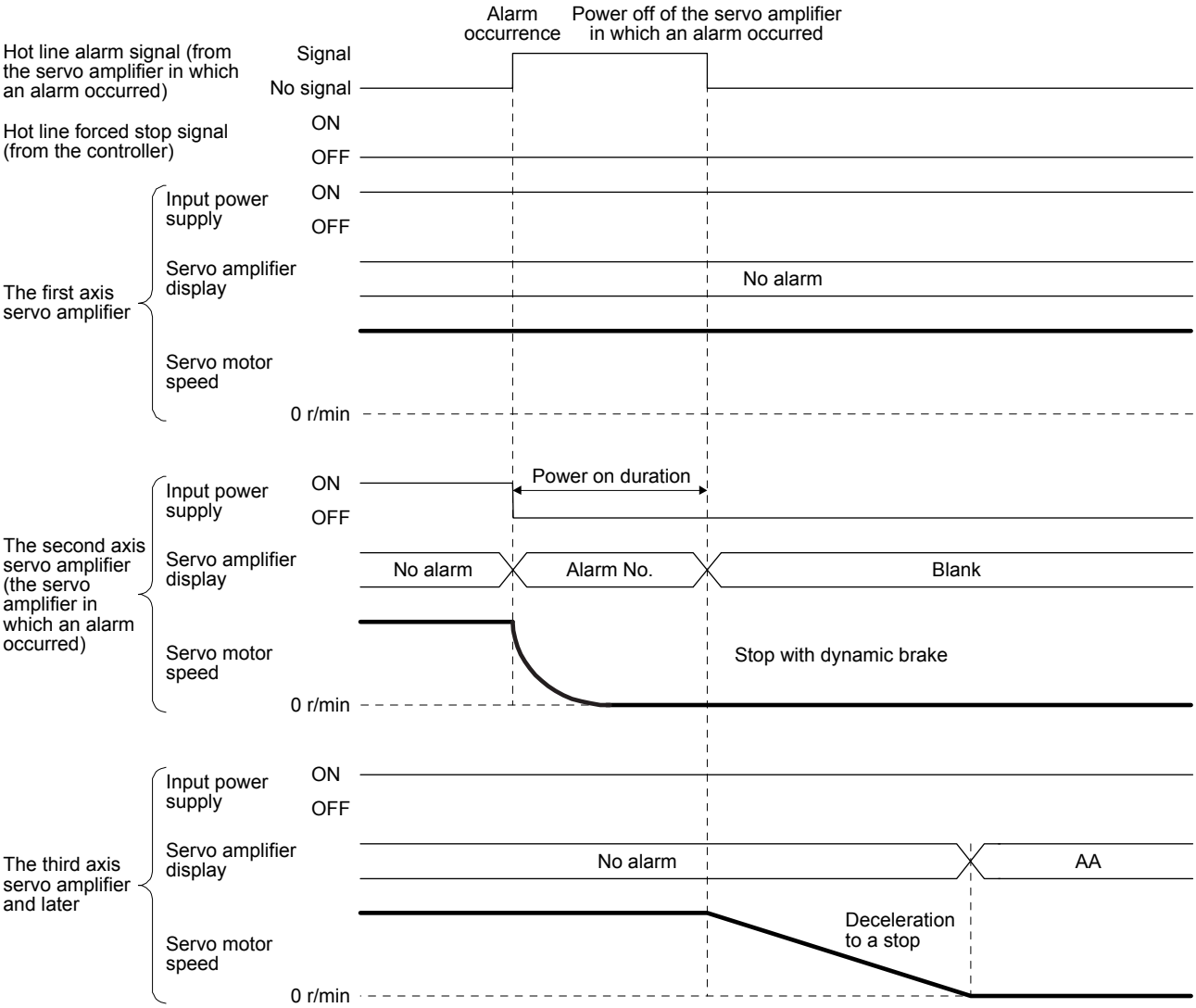

3) When the power of the second axis servo amplifier is turned off
It is the same as (4) (a) 3) in this section.

4) When power supplies of all servo amplifiers are turned off
It is the same as (4) (a) 4) in this section.

3.8 Interfaces

3.8.1 Internal connection diagram

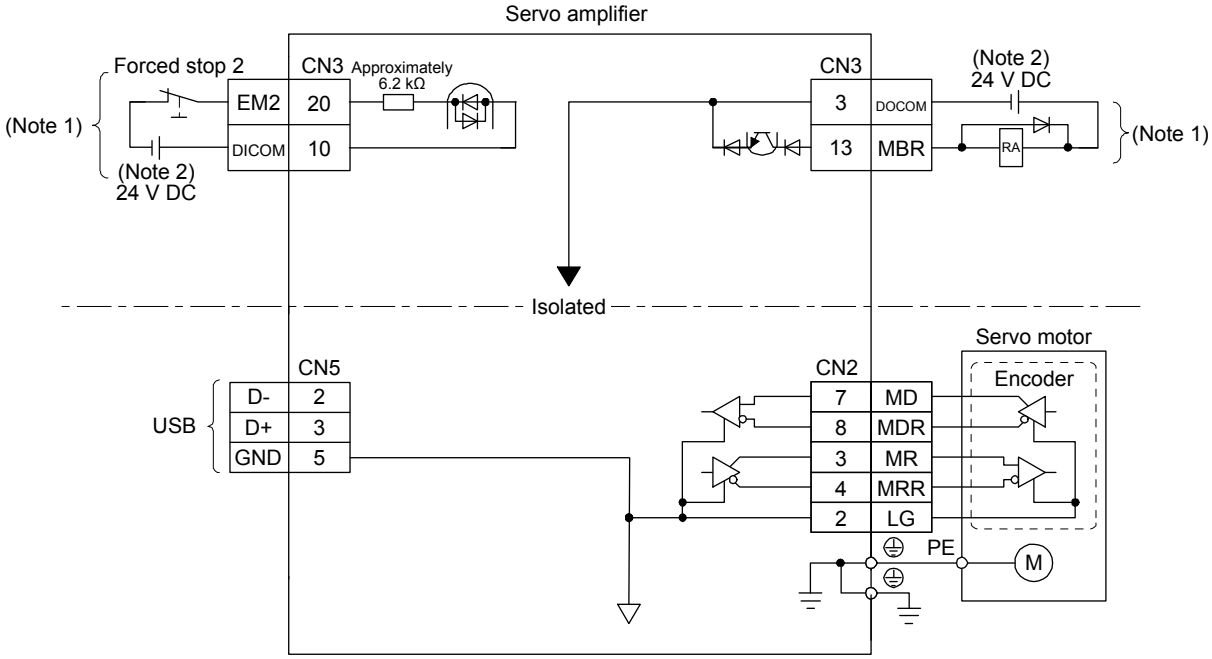

Note 1. This diagram is for the sink I/O interface. For source I/O interface, refer to section 3.8.3.

2. The illustration of the 24 V DC power supply is divided between input signal and output signal for convenience. However, they can be configured by one.

3.8.2 Detailed explanation of interfaces

This section provides the details of the I/O signal interfaces (refer to the I/O division in the table) given in section 3.5. Refer to this section and make connection with the external device.

(1) Digital input interface DI-1

This is an input circuit whose photocoupler cathode side is the input terminal. Transmit signals from sink (open-collector) type transistor output, relay switch, etc. The following is a connection diagram for sink input. Refer to section 3.8.3 for source input.

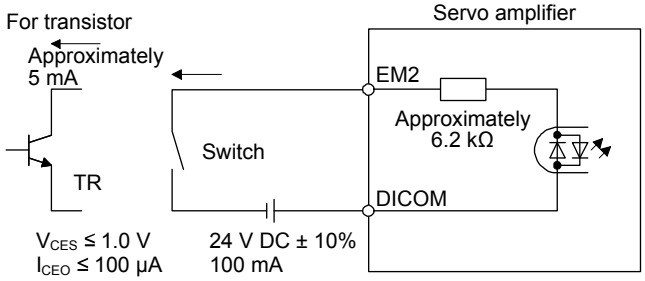

(2) Digital output interface DO-1

This is a circuit in which the collector of the output transistor is the output terminal. When the output transistor is turned on, the current will flow from the collector terminal.

A lamp, relay, or photocoupler can be driven. Install a diode (D) for an inductive load, or install an inrush current suppressing resistor (R) for a lamp load.

(Rated current: 40 mA or lower, maximum current: 50 mA or lower, inrush current: 100 mA or lower) A maximum of 2.6 V voltage drop occurs in the servo amplifier.

The following shows a connection diagram for sink output. Refer to section 3.8.3 for source output.

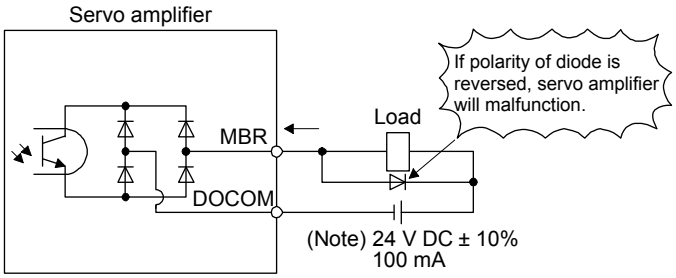

Note. If the voltage drop (maximum of 2.6 V) interferes with the relay operation, apply high voltage (maximum of 26.4 V) from an external source.

3.8.3 Source I/O interfaces

In this servo amplifier, source type I/O interfaces can be used.

(1) Digital input interface DI-1
This is an input circuit in which the anode of the photocoupler is the input terminal. Transmit signals from source (open-collector) type transistor output, relay switch, etc.

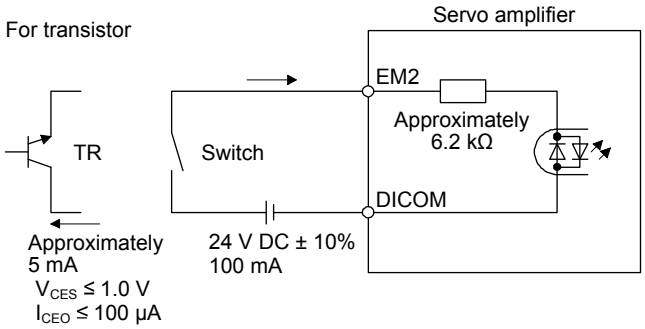

(2) Digital output interface DO-1
This is a circuit in which the emitter of the output transistor is the output terminal. When the output transistor is turned on, the current will flow from the output terminal to a load.
A maximum of 2.6 V voltage drop occurs in the servo amplifier.

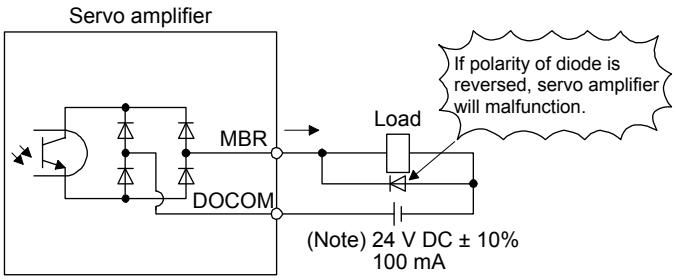

Note. If the voltage drop (maximum of 2.6 V) interferes with the relay operation, apply high voltage (maximum of 26.4 V) from an external source.

3.9 SSCNET III cable connection

POINT

●Do not look directly at the light generated from the CN1A/CN1B connector of the servo amplifier or the end of the SSCNET III cable. The light can be a discomfort when it enters the eye.

(1) SSCNET III cable connection

For the CN1A connector, connect the SSCNET III cable connected to a controller in host side or a servo amplifier of the previous axis. For the CN1B connector, connect the SSCNET III cable connected to the servo amplifier of the next axis. For the CN1B connector of the final axis, put a cap came with the servo amplifier.

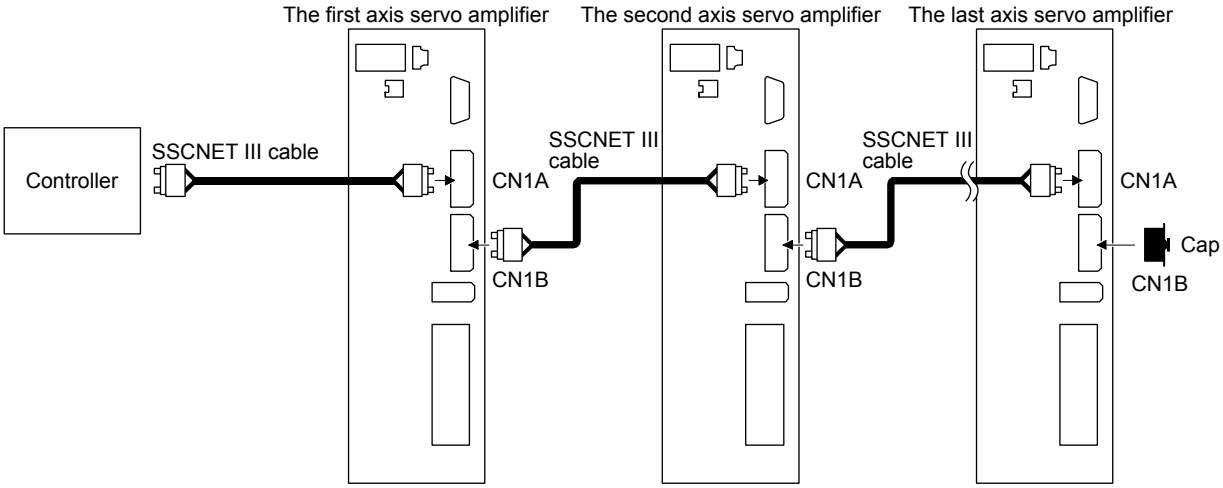

(2) How to connect/disconnect cable

POINT

●The CN1A and CN1B connectors are capped to protect light devices inside the connector from dust. For this reason, do not remove a cap until just before mounting an SSCNET III cable. Then, when removing the SSCNET III cable, make sure to put a cap.

●Keep the cap for the CN1A/CN1B connector and the tube for protecting the optical cord end of an SSCNET III cable in a plastic bag with a zipper of the SSCNET III cable to prevent them from becoming dirty.

●When asking repair of the servo amplifier for some malfunctions, make sure to cap the CN1A and CN1B connectors. When the connector is not capped, the light device may be damaged at the transit. In this case, replacing and repairing the light device are required.

(a) Connection

1) For an SSCNET III cable in the shipping status, the tube for protecting the optical cord end is put on the end of connector. Remove this tube.

2) Remove the CN1A and CN1B connector caps of the servo amplifier.

3) While holding a tab of the SSCNET III cable connector, make sure to insert it into the CN1A and CN1B connectors of the servo amplifier until you hear the click. If the end face of the optical cord tip is dirty, optical transmission is interrupted and it may cause malfunctions. If it becomes dirty, wipe with a bonded textile, etc. Do not use solvent such as alcohol.

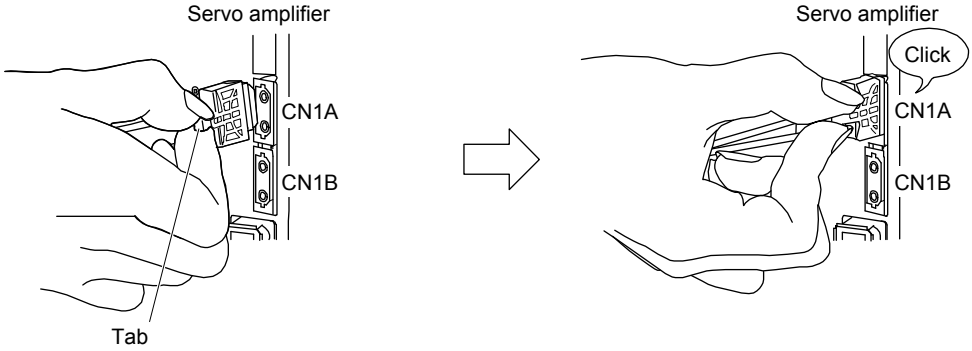

(b) Disconnection

While holding a tab of the SSCNET III cable connector, pull out the connector.
When pulling out the SSCNET III cable from the servo amplifier, be sure to put the cap on the connector parts of the servo amplifier to prevent them from becoming dirty. For the SSCNET III cable, attach the tube for protecting the optical cord's end face on the end of the connector.

3.10 Servo motor with an electromagnetic brake

3.10.1 Safety precautions

●Configure an electromagnetic brake circuit so that it is activated also by an external EMG stop switch.

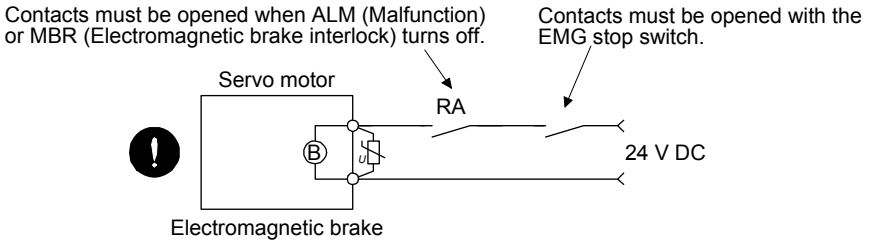

⚠CAUTION

●The electromagnetic brake is provided for holding purpose and must not be used for ordinary braking.

●Before operating the servo motor, be sure to confirm that the electromagnetic brake operates properly.

●Do not use the 24 V DC interface power supply for the electromagnetic brake. Always use the power supply designed exclusively for the electromagnetic brake. Otherwise, it may cause a malfunction.

●When using EM2 (Forced stop 2), use MBR (Electromagnetic brake interlock) for operating the electromagnetic brake. Operating the electromagnetic brake without using MBR during deceleration to a stop will saturate servo motor torques at the maximum value due to brake torque of the electromagnetic brake. This can result in delay of the deceleration to a stop from a set value.

POINT

●Refer to "HG-KN_/HG-SN_ Servo Motor Instruction Manual" for specifications such as the power supply capacity and operation delay time of the electromagnetic brake.

●Refer to "HG-KN_/HG-SN_ Servo Motor Instruction Manual" for the selection of a surge absorber for the electromagnetic brake.

Note the following when the servo motor with an electromagnetic brake is used.

1) The brake will operate when the power (24 V DC) turns off.

2) Turn off the servo-on command after the servo motor stopped.

(1) Connection diagram

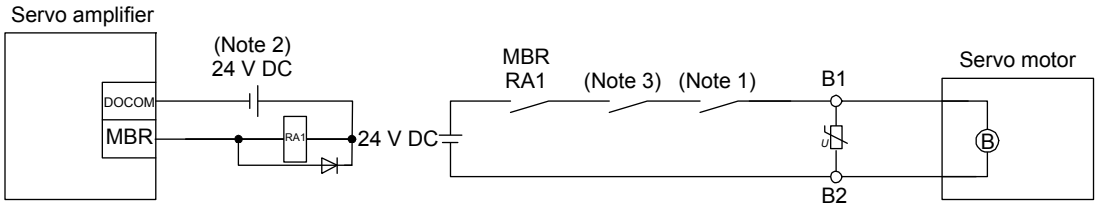

Note 1. Create the circuit in order to shut off by interlocking with the emergency stop switch.
2. Do not use the 24 V DC interface power supply for the electromagnetic brake.
3. Create the circuit in order to shut off by interlocking with an alarm detected by the controller.

(2) Setting

In [Pr. PC02 Electromagnetic brake sequence output], set a delay time (Tb) from MBR (Electromagnetic brake interlock) off to base circuit shut-off at a servo-off as in the timing chart in section 3.10.2.

3.10.2 Timing chart

(1) When you use the forced stop deceleration function

POINT
●To enable the function, set "2 _ _ _ (initial value)" in [Pr. PA04].

(a) Servo-on command (from controller) on/off

When the servo-on command is turned off, the servo lock will be released after Tb [ms], and the servo motor will coast. If the electromagnetic brake is enabled during servo-lock, the brake life may be shorter. Therefore, set Tb about 1.5 times of the minimum delay time where the moving part will not drop down for a vertical axis system, etc.

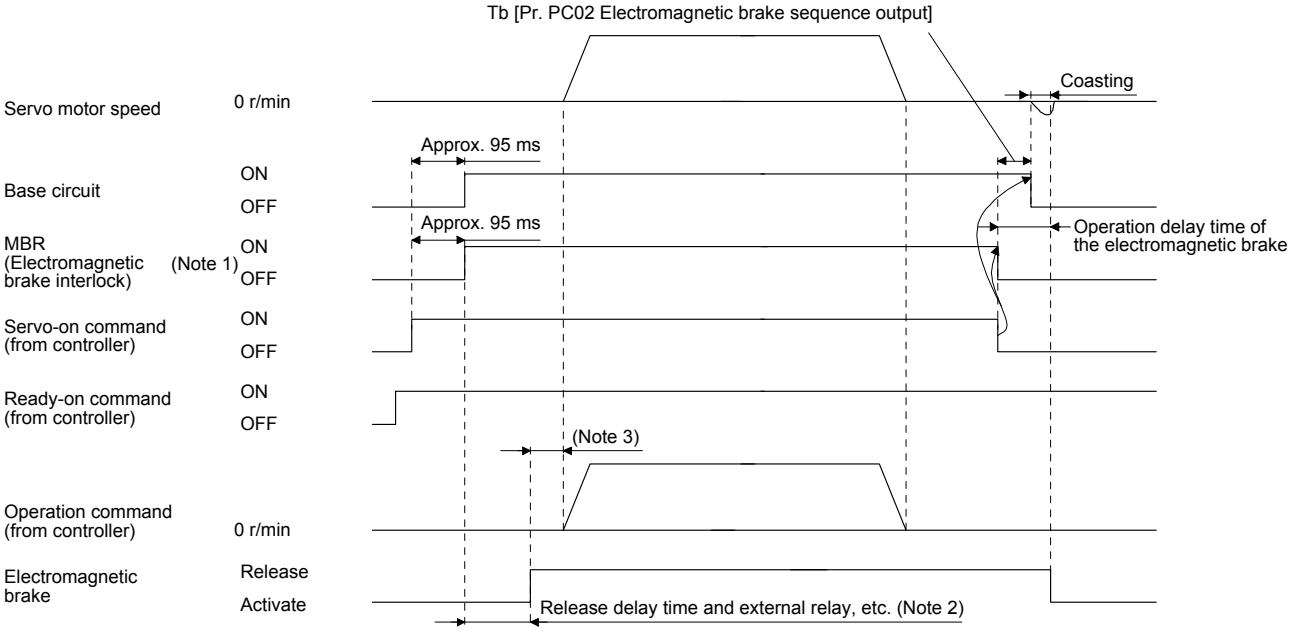

Note 1. ON: The electromagnetic brake is not activated.
OFF: The electromagnetic brake is activated.

2. The electromagnetic brake is released after the release delay time of the electromagnetic brake and operation time of the external circuit relay, etc. For the release delay time of the electromagnetic brake, refer to "Servo Motor Instruction Manual (Vol. 3)".

3. Give the operation command from the controller after the electromagnetic brake is released.

(b) Off/on of the forced stop command (from controller) or EM2 (Forced stop 2)

POINT
●In the torque control mode, the forced stop deceleration function cannot be used.

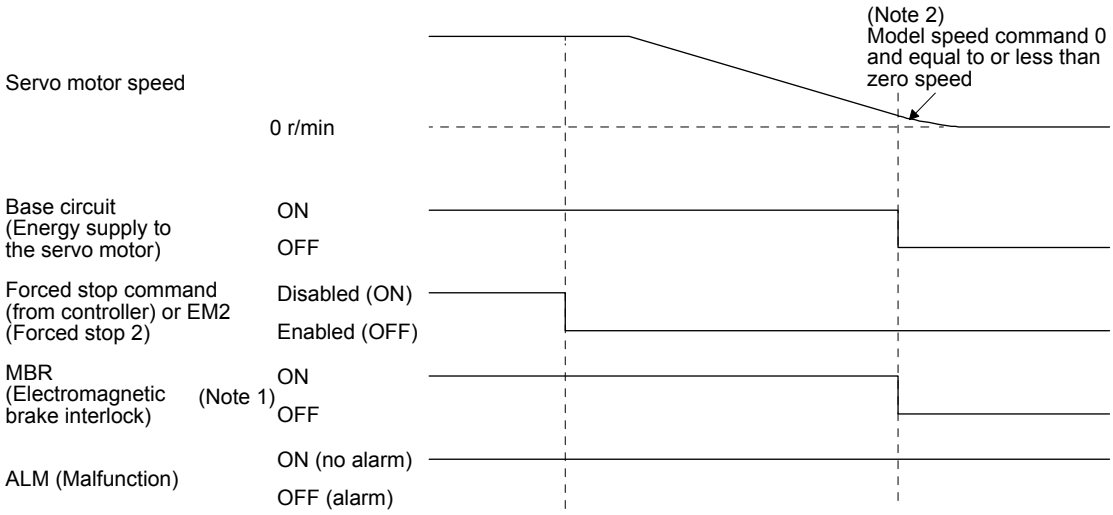

Note 1. ON: The electromagnetic brake is not activated.
OFF: The electromagnetic brake is activated.
2. The model speed command is a speed command generated in the servo amplifier for forced stop deceleration of the servo motor.

(c) Alarm occurrence
The operation status during an alarm is the same as section 3.7.

(d) Power off

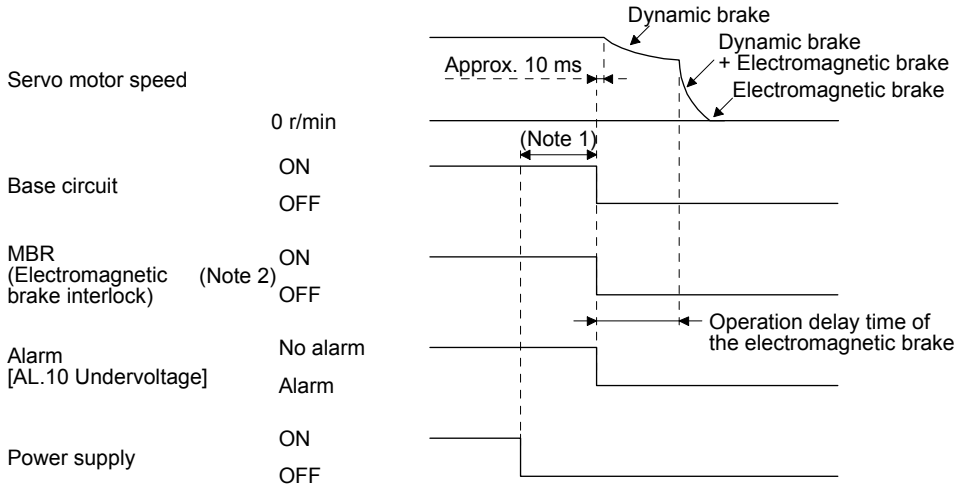

Note 1. Variable according to the operation status.
2. ON: The electromagnetic brake is not activated.
OFF: The electromagnetic brake is activated.

(e) Ready-off command from controller

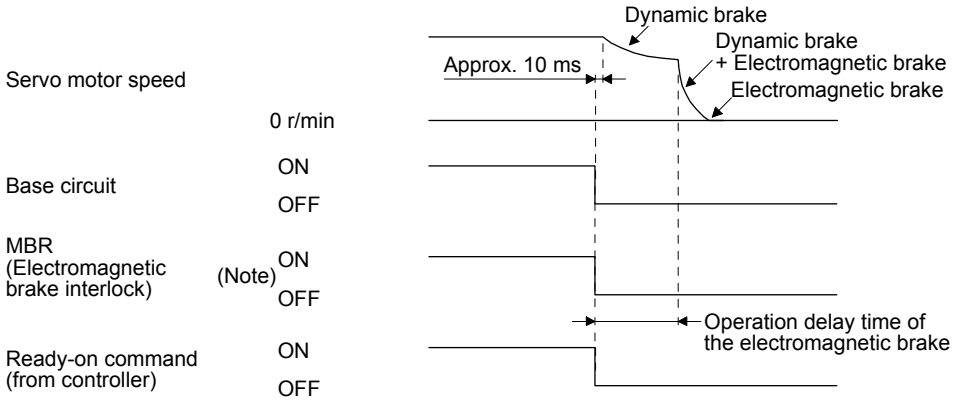

Note. ON: The electromagnetic brake is not activated.
OFF: The electromagnetic brake is activated.

(2) When you do not use the forced stop deceleration function

POINT
●To disable the function, set "0 _ _ _" in [Pr. PA04].

(a) Servo-on command (from controller) on/off
It is the same as (1) (a) in this section.

(b) Off/on of the forced stop command (from controller) or EM1 (Forced stop 1)

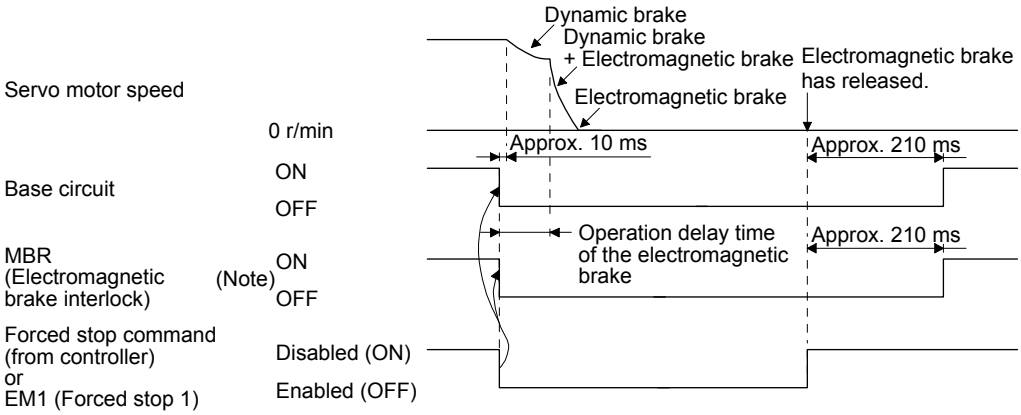

Note. ON: The electromagnetic brake is not activated.
OFF: The electromagnetic brake is activated.

(c) Alarm occurrence
The operation status during an alarm is the same as section 3.7.

(d) Power off
It is the same as (1) (d) of this section.

(e) Ready-off command from controller
It is the same as (1) (e) in this section.

3.11 Grounding

⚠WARNING
- Ground the servo amplifier and servo motor securely.
- To prevent an electric shock, always connect the protective earth (PE) terminal (marked with ⏚) of the servo amplifier to the protective earth (PE) of the cabinet.

The servo amplifier switches the power transistor on-off to supply power to the servo motor. Depending on the wiring and ground cable routing, the servo amplifier may be affected by the switching noise (due to di/dt and dv/dt) of the transistor. To prevent such a fault, refer to the following diagram and always ground.
To conform to the EMC Directive, refer to the EMC Installation Guidelines (IB(NA)67310).

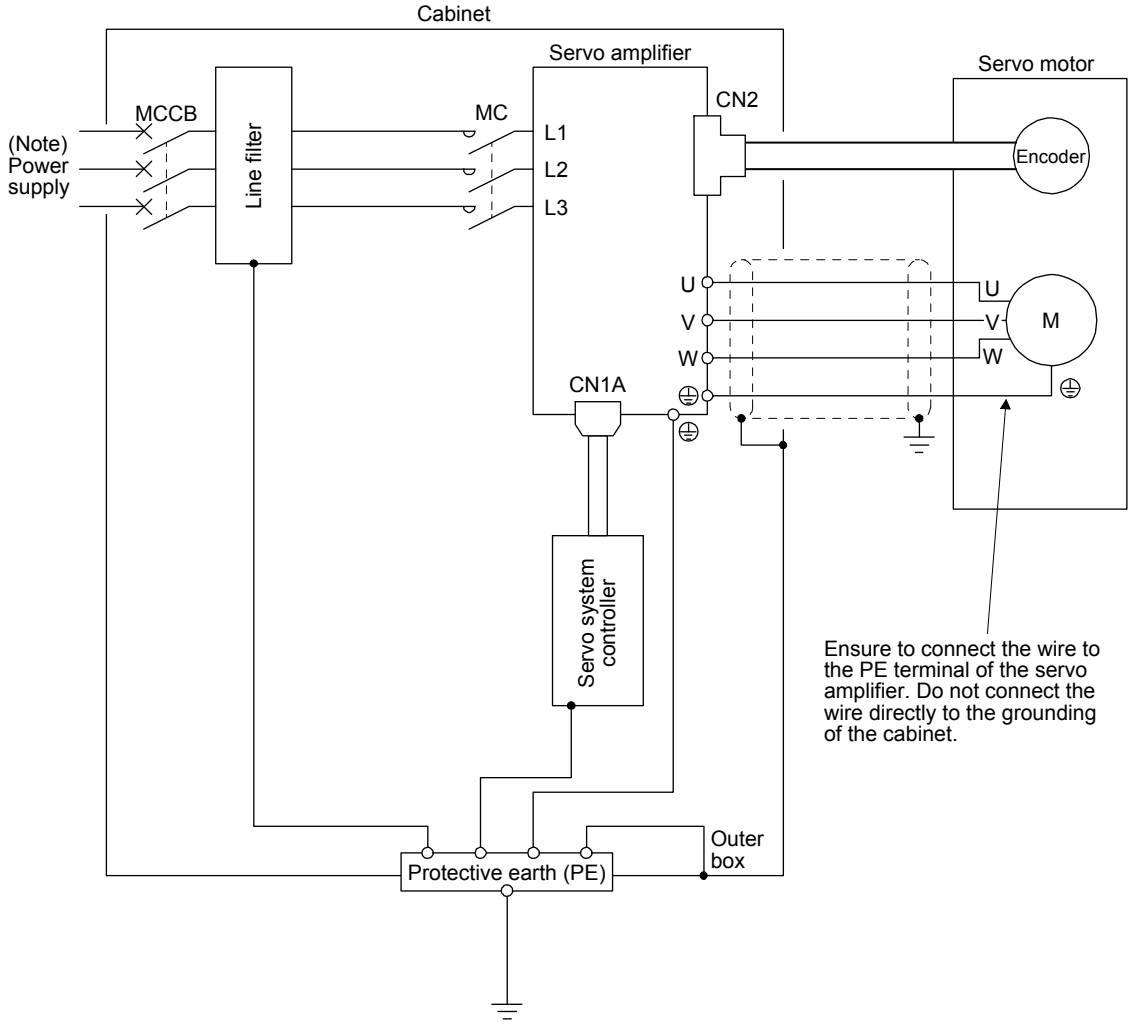

Note. For the power supply specifications, refer to section 1.3.

MEMO

4. STARTUP

⚠WARNING

- Do not operate the switches with wet hands. Otherwise, it may cause an electric shock.

⚠CAUTION

- Before starting operation, check the parameters. Improper settings may cause some machines to operate unexpectedly.
- The servo amplifier heat sink, regenerative resistor, servo motor, etc. may be hot while power is on or for some time after power-off. Take safety measures, e.g. provide covers, to avoid accidentally touching the parts (cables, etc.) by hand.
- During operation, never touch the rotor of the servo motor. Otherwise, it may cause injury.

4.1 Switching power on for the first time

When switching power on for the first time, follow this section to make a startup.

4.1.1 Startup procedure

Wiring check	Check whether the servo amplifier and servo motor are wired correctly using visual inspection, the DO forced output function (section 4.5.1), etc. (Refer to section 4.1.2.)
Surrounding environment check	Check the surrounding environment of the servo amplifier and servo motor. (Refer to section 4.1.3.)
Axis No. settings	Confirm that the control axis No. set with the axis selection rotary switch (SW1) and the control axis No. set with the servo system controller are consistent. (Refer to section 4.3.1.)
Parameter setting	As necessary, set parameters. (Refer to chapter 5.)
Test operation of the servo motor alone in test operation mode	For the test operation, with the servo motor disconnected from the machine and operated at the speed as low as possible, check whether the servo motor rotates correctly. (Refer to section 4.5.)
Test operation of the servo motor alone by commands	For the test operation with the servo motor disconnected from the machine and operated at the speed as low as possible, give commands to the servo amplifier and check whether the servo motor rotates correctly.
Test operation with the servo motor and machine connected	After connecting the servo motor with the machine, check machine motions with sending operation commands from the servo system controller.
Gain adjustment	Adjust gains to optimize the machine motions. (Refer to chapter 6.)
Actual operation	
Stop	Stop giving commands and stop operation.

4.1.2 Wiring check

(1) Power supply system wiring
Before switching on the power supply, check the following items.

(a) Power supply system wiring
The power supplied to the power input terminals (L1, L2, and L3) of the servo amplifier should satisfy the defined specifications. (Refer to section 1.3.)

(b) Connection of the servo amplifier and servo motor
1) The servo amplifier power output (U, V, and W) should match in phase with the servo motor power input terminals (U, V, and W).

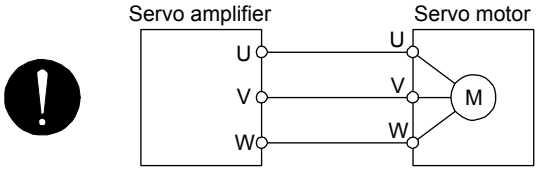

2) The power supplied to the servo amplifier should not be connected to the power output (U, V, and W). Doing so will cause failure of the connected servo amplifier and servo motor.

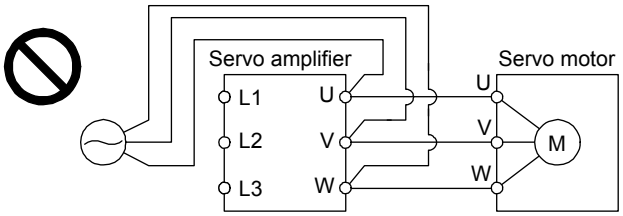

3) The grounding terminal of the servo motor is connected to the PE terminal of the servo amplifier.

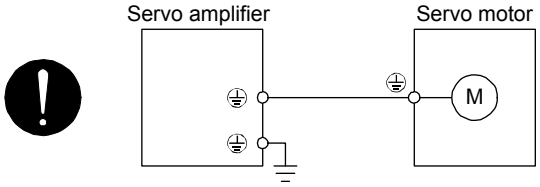

4) The CN2 connector of the servo amplifier should be connected to the encoder of the servo motor securely using the encoder cable.

(c) When you use an option and peripheral equipment
1) When you use a regenerative option for 1 kW or less servo amplifiers
- The built-in regenerative resistor and wirings should be removed from the servo amplifier.
- The lead wire of the built-in regenerative resistor connected to the P+ terminal and C terminal should not be connected.
- The regenerative option should be connected to the P+ terminal and C terminal.
- A twisted cable should be used. (Refer to section 11.2.4.)

2) When you use a regenerative option for 2 kW or more servo amplifiers
- The lead wire between the P+ terminal and D terminal should not be connected.
- The regenerative option should be connected to the P+ terminal and C terminal.
- A twisted cable should be used. (Refer to section 11.2.4.)

(2) I/O signal wiring

(a) The I/O signals should be connected correctly.
Use the DO forced output to forcibly turn on or off the pins of the CN3 connector. This function can be used to check the wiring. At this time, check the wiring in the servo-off status.
Refer to section 3.2 for details of I/O signal connection.

(b) A voltage exceeding 24 V DC is not applied to the pins of the CN3 connector.

(c) The wire between the plate and DOCOM of the CN3 connector should not be shorted.

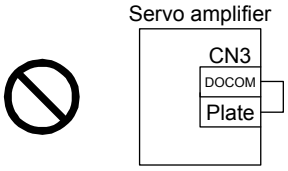

4.1.3 Surrounding environment

(1) Cable routing

(a) The wiring cables should not be stressed.

(b) The encoder cable should not be used in excess of its bending life. (Refer to section 10.4.)

(c) The connector of the servo motor should not be stressed.

(2) Environment
Signal cables and power cables are not shorted by wire offcuts, metallic dust, or the like.

4.2 Startup

Connect the servo motor with a machine after confirming that the servo motor operates properly alone.

(1) Power on

When the power supply is turned on, "b01" (for the first axis) appears on the servo amplifier display. When you use the absolute position detection system, first power-on results in [AL. 25 Absolute position erased] and the servo system cannot be switched on. The alarm can be deactivated by switching power off once and on again.

Also, if power is switched on at the servo motor speed of 3000 r/min or faster, a position mismatch may occur due to external force or the like. Power must therefore be switched on when the servo motor is at a stop.

(2) Parameter setting

> POINT
>
> ●The following encoder cables are of four-wire type. When using any of these encoder cables, set [Pr. PC04] to "1 _ _ _" to select the four-wire type. An incorrect setting will result in [AL. 16 Encoder initial communication error 1].
> MR-EKCBL30M-L
> MR-EKCBL30M-H
> MR-EKCBL40M-H
> MR-EKCBL50M-H

Set the parameters according to the structure and specifications of the machine. Refer to chapter 5 for details.

After setting the above parameters, turn off the power as necessary. Then switch power on again to enable the parameter values.

(3) Servo-on

Enable the servo-on with the following procedure.

(a) Switch on the power.

(b) Transmit the servo-on command with the servo system controller.

When the servo-on status is enabled, the servo amplifier is ready to operate and the servo motor is locked.

(4) Home position return

Always perform home position return before starting positioning operation.

(5) Stop

If any of the following situations occurs, the servo amplifier suspends the running of the servo motor and brings it to a stop.

Refer to section 3.10 for the servo motor with an electromagnetic brake.

	Operation and command	Stopping condition
Servo system controller	Servo-off command	The base circuit is shut off and the servo motor coasts.
	Ready-off command	The base circuit is shut off and the dynamic brake operates to bring the servo motor to a stop.
	Forced stop command	The servo motor decelerates to a stop with the command. [AL. E7 Controller forced stop warning] occurs.
Servo amplifier	Alarm occurrence	The servo motor decelerates to a stop with the command. With some alarms, however, the dynamic brake operates to bring the servo motor to a stop. (Refer to chapter 8. (Note))
	EM2 (Forced stop 2) off	The servo motor decelerates to a stop with the command. [AL. E6 Servo forced stop warning] occurs. EM2 has the same function as that of EM1 in the torque control mode.

Note. Only a list of alarms and warnings is listed in chapter 8. Refer to "MELSERVO-JE Servo Amplifier Instruction Manual (Troubleshooting)" for details of alarms and warnings.

4.3 Switch setting and display of the servo amplifier

The control axis No. can be set with switches on the servo amplifier.
On the servo amplifier display (three-digit, seven-segment LED), check the status of communication with the servo system controller at power-on and the axis number, and diagnose a malfunction at occurrence of an alarm.

4.3.1 Axis selection rotary switch (SW1)

⚠WARNING

- When switching the axis selection rotary switch (SW1), use an insulated screw driver. Do not use a metal screw driver. Touching patterns on electronic boards, lead of electronic parts, etc. may cause an electric shock.

POINT

- The control axis No. set to the axis selection rotary switch (SW1) should be the same as the one set to the servo system controller. The number of the axes you can set depends on the servo system controller.
- For setting the axis selection rotary switch, use a flat head screwdriver with the blade edge width of 2.1 mm to 2.3 mm and the blade edge thickness of 0.6 mm to 0.7 mm.
- Cycling the power supply enables the setting of the switch.

The control axis No. can be set in the range of 1 to 16 with the axis selection rotary switch.a t
If the same numbers are set to different control axes in a single communication system, the system will not operate properly. The control axes may be set independently of the SSCNET III cable connection sequence.
Table 4.1 shows control axis numbers corresponding to the axis selection rotary switch to set the control axis number.

Axis selection rotary switch (SW1)

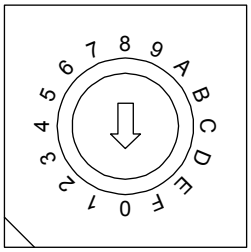

Table 4.1 Switch combination list for the control axis No. setting

Axis selection rotary switch (SW1)	Control axis No.
0	1
1	2
2	3
3	4
4	5
5	6
6	7
7	8
8	9
9	10
A	11
B	12
C	13
D	14
E	15
F	16

4.3.2 Scrolling display

(1) Normal display

When there is no alarm, the axis No. and blank are displayed in rotation.

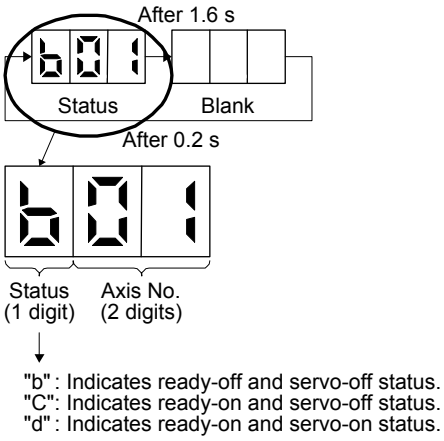

(2) Alarm display

When an alarm occurs, the alarm number (two digits) and the alarm detail (one digit) are displayed following the status display. For example, the following shows when [AL. 32 Overcurrent] is occurring.

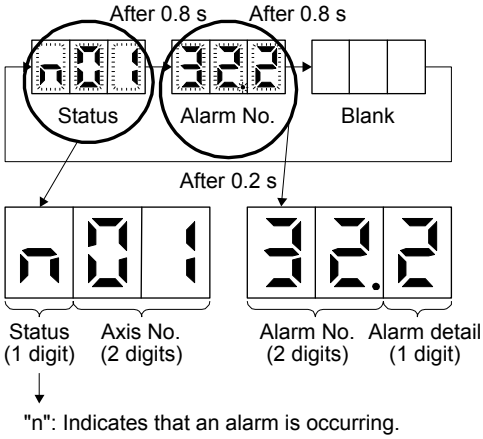

4.3.3 Status display of an axis

(1) Display sequence

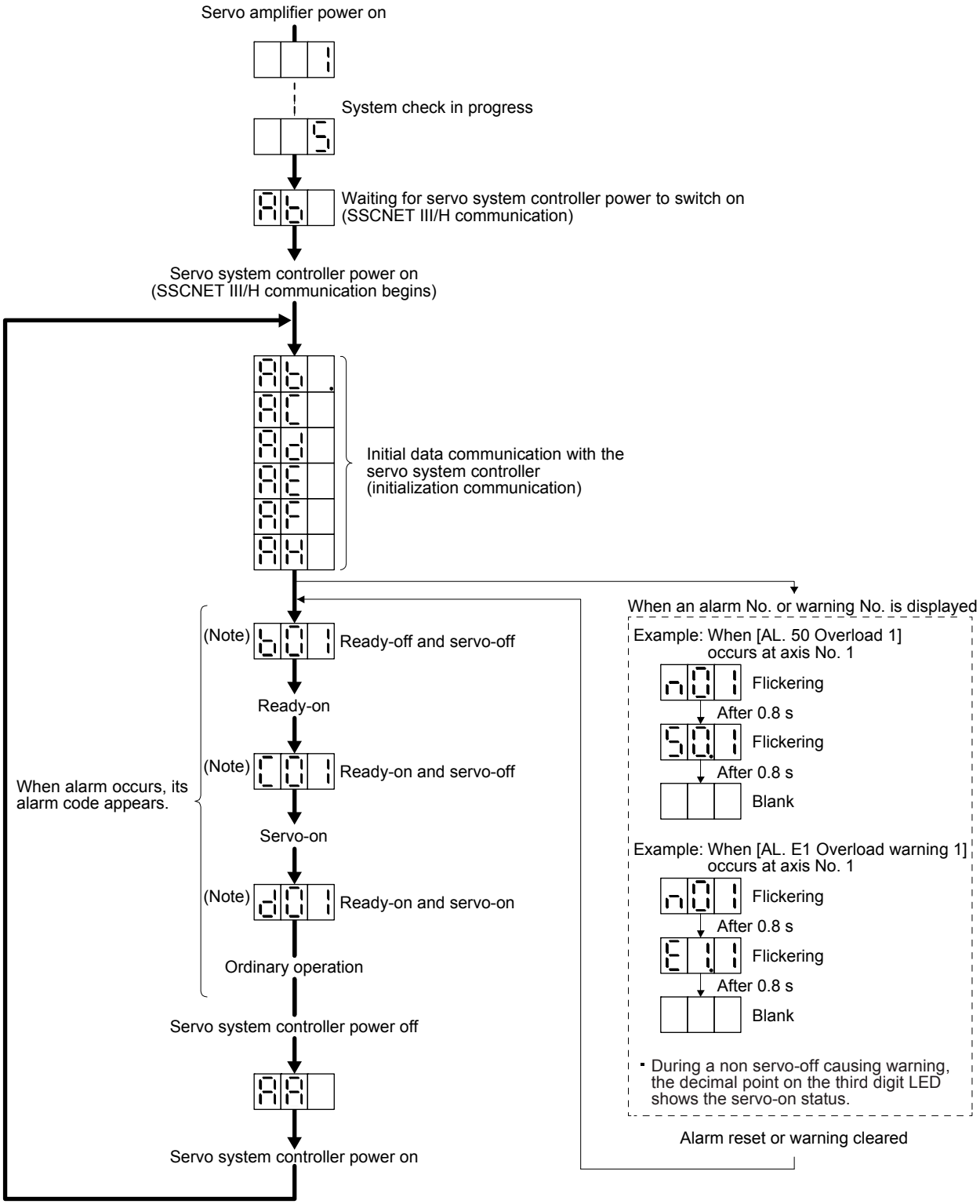

Note. 01 02 ... 16 The segment of the last 2 digits shows the axis number.

Axis No. 1 Axis No. 2 Axis No. 16

(2) Indication list

POINT
●Refer to section 1.6 of "MELSERVO-JE Servo Amplifier Instruction Manual (Troubleshooting)" for troubleshooting at startup.

Indication	Status	Description
1 ⋮ 5	Initializing	System check in progress
A b	Initializing	・The servo amplifier power was switched on when the servo system controller power was off. ・The control axis No. set to the axis selection rotary switch (SW1) does not match the one set to the servo system controller. ・A servo amplifier malfunctioned, or communication error occurred with the servo system controller or the previous axis servo amplifier. In this case, the indication changes as follows: "Ab", "AC", "Ad", and "Ab" ・The servo system controller is malfunctioning.
A b .	Initializing	During an initial setting for communication specifications
A C	Initializing	An initial setting for communication specifications is completed, and then it synchronized with the servo system controller.
A d	Initializing	During initial parameter setting communication with the servo system controller
A E	Initializing	During the servo motor and encoder information and telecommunication with the servo system controller
A F	Initializing	During initial signal data communication with the servo system controller
A H	Initializing completion	The process for initial data communication with the servo system controller is completed.
A A	Initializing standby	The power supply of the servo system controller or previous axis servo amplifier was turned off while the power supply of the servo amplifier is on.
(Note 1) b # #	Ready-off	The ready-off command from the servo system controller was received.
(Note 1) d # #	Servo-on	The servo-on command from the servo system controller was received.
(Note 1) C # #	Servo-off	The servo-off command from the servo system controller was received.
(Note 2) * * *	Alarm and warning	The alarm No. and the warning No. that occurred are displayed. (Refer to chapter 8. (Note 4))
8 8 8	CPU error	A CPU watchdog error has occurred.
(Note 1) b # #. d # #. C # #.	(Note 3) Test operation mode	Motor-less operation

Note 1. The meanings of ## are listed below.

##	Description
01 ~ 16	First axis ~ Sixteenth axis

2. "***" indicates the alarm No. and the warning No.
3. Requires the MR Configurator2.
4. Only a list of alarms and warnings is listed in chapter 8. Refer to "MELSERVO-JE Servo Amplifier Instruction Manual (Troubleshooting)" for details of alarms and warnings.

4.4 Test operation

Before starting actual operation, perform test operation to make sure that the machine operates normally. Refer to section 4.2 for how to power on and off the servo amplifier.

> **POINT**
>
> ●If necessary, verify controller programs by using motor-less operation. Refer to section 4.5.2 for the motor-less operation.

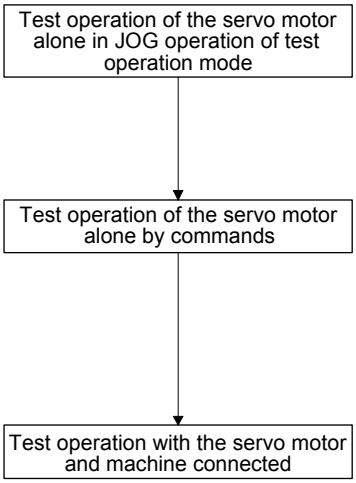

In this step, confirm that the servo amplifier and servo motor operate normally. With the servo motor disconnected from the machine, use the test operation mode and check whether the servo motor rotates correctly. Refer to section 4.5 for the test operation mode.

In this step, confirm that the servo motor rotates correctly under the commands from the controller.
Give a low speed command first and check the rotation direction, etc. of the servo motor. If the machine does not operate in the intended direction, check the input signal.

In this step, connect the servo motor with the machine and confirm that the machine operates normally under the commands from the controller.
Give a low speed command first and check the operation direction, etc. of the machine. If the machine does not operate in the intended direction, check the input signal.
Check any problems with the servo motor speed, load ratio, and other status display items with MR Configurator2.
Then, check automatic operation with the program of the controller.

4.5 Test operation mode

> **⚠CAUTION**
>
> ●The test operation mode is designed for checking servo operation. It is not for checking machine operation. Do not use this mode with the machine. Always use the servo motor alone.
>
> ●If the servo motor operates abnormally, use EM2 (Forced stop 2) to stop it.

> **POINT**
>
> ●The content described in this section indicates that the servo amplifier and a personal computer are directly connected.

By using a personal computer and MR Configurator2, you can execute JOG operation, positioning operation, output signal forced output, and program operation without connecting the servo system controller.

4.5.1 Test operation mode in MR Configurator2

POINT

- When "_ _ 1 _" is set in [Pr. PC05] to enable the test operation mode, the SSCNET III/H communication for the servo amplifier in the test operation mode and the following servo amplifiers is blocked.
- When setting [Pr. PC05] to "_ _ 1 _", set it via CN5 (USB connector). When setting it, disconnect the SSCNET III cable or turn off the power supply of the controller.

(1) Test operation mode

(a) JOG operation

JOG operation can be performed without using the servo system controller. Use this operation with the forced stop reset. This operation may be used independently of whether the servo is on or off and whether the servo system controller is connected or not.
Exercise control on the JOG operation screen of MR Configurator2.

1) Operation pattern

Item	Initial value	Setting range
Speed [r/min]	200	0 to maximum speed
Acceleration/deceleration time constant [ms]	1000	0 to 50000

2) Operation method

・The check box "Rotation only while the CCW or CW button is being pushed" is checked.

Operation	Screen control
Forward rotation start	Keep pressing the "Forward CCW" button.
Reverse rotation start	Keep pressing the "Reverse CW" button.
Stop	Release the "Forward CCW" or "Reverse CW" button.
Forced stop	Click the "Forced Stop" button.

・The check box "Rotation only while the CCW or CW button is being pushed" is unchecked.

Operation	Screen control
Forward rotation start	Click the "Forward CCW" button.
Reverse rotation start	Click the "Reverse CW" button.
Stop	Click the "Stop" button.
Forced stop	Click the "Forced Stop" button.

(b) Positioning operation

Positioning operation can be performed without using the servo system controller. Use this operation with the forced stop reset. This operation may be used independently of whether the servo is on or off and whether the servo system controller is connected or not.

Exercise control on the positioning operation screen of MR Configurator2.

1) Operation pattern

Item	Initial value	Setting range
Travel distance [pulse]	4000	0 to 99999999
Speed [r/min]	200	0 to maximum speed
Acceleration/deceleration time constant [ms]	1000	0 to 50000
Repeat pattern	Fwd. rot. (CCW) to rev. rot. (CW)	Fwd. rot. (CCW) to rev. rot. (CW) Fwd. rot. (CCW) to fwd. rot. (CCW) Rev. rot. (CW) to fwd. rot. (CCW) Rev. rot. (CW) to rev. rot. (CW)
Dwell time [s]	2.0	0.1 to 50.0
Number of repeats [time]	1	1 to 9999

2) Operation method

Operation	Screen control
Forward rotation start	Click the "Forward CCW" button.
Reverse rotation start	Click the "Reverse CW" button.
Pause	Click the "Pause" button.
Stop	Click the "Stop" button.
Forced stop	Click the "Forced Stop" button.

(c) Program operation

Positioning operation can be performed in two or more operation patterns combined, without using the servo system controller. Use this operation with the forced stop reset. This operation may be used independently of whether the servo is on or off and whether the servo system controller is connected or not.

Exercise control on the program operation screen of MR Configurator2. For full information, refer to the MR Configurator2 Installation Guide.

Operation	Screen control
Start	Click the "Operation Start" button.
Pause	Click the "Pause" button.
Stop	Click the "Stop" button.
Forced stop	Click the "Forced Stop" button.

(d) Output signal (DO) forced output

Output signals can be switched on or off forcibly independently of the servo status. This function is used for output signal wiring check, etc. Exercise control on the DO forced output screen of MR Configurator2.

(2) Operation procedure

1) Set "_ _ 1 _" in [Pr. PC05] and cycle the power.
When initialization is completed, the decimal point on the first digit will flicker.

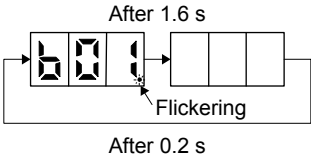

When an alarm or warning also occurs during the test operation, the decimal point on the first digit will flicker as follows.

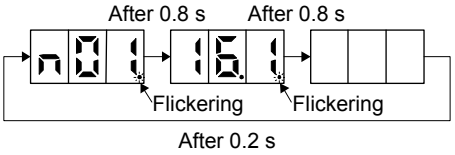

2) Start operation with the personal computer.

4.5.2 Motor-less operation in the controller

POINT
●Use motor-less operation which is available by making the servo system controller parameter setting. ●Connect the servo amplifier with the servo system controller before the motor-less operation.

(1) Motor-less operation
Without connecting a servo motor to the servo amplifier, output signals or status displays can be provided in response to the servo system controller commands as if the servo motor is actually running. This operation may be used to check the servo system controller sequence. Use this operation with the forced stop reset. Use this operation with the servo amplifier connected to the servo system controller. To stop the motor-less operation, set the motor-less operation selection to "Disable" in the servo parameter setting of the servo system controller. When the power supply is turned on next time, motor-less operation will be disabled.

(a) Load conditions

Load item	Condition
Load torque	0
Load to motor inertia ratio	Same as the moment of inertia of the servo motor

(b) Alarms

The following alarms and warnings do not occur. However, the other alarms and warnings occur as when the servo motor is connected.

Alarm and warning
[AL. 16 Encoder initial communication error 1]
[AL. 1E Encoder initial communication error 2]
[AL. 1F Encoder initial communication error 3]
[AL. 20 Encoder normal communication error 1]
[AL. 21 Encoder normal communication error 2]
[AL. 25 Absolute position erased]
[AL. 92 Battery cable disconnection warning]
[AL. 9F Battery warning]

(2) Operation procedure

1) Set the servo amplifier to the servo-off status.

2) Set "_ _ 0 1" in [Pr. PC05] and cycle the power.

3) Start the motor-less operation with the servo system controller.
The display shows the following screen.

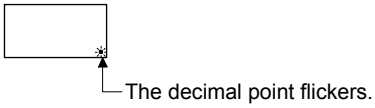

5. PARAMETERS

⚠CAUTION

- Never adjust or change the parameter values drastically as doing so will make the operation unstable.
- If fixed values are written in the digits of a parameter, do not change these values.
- Do not change parameters for manufacturer setting.
- Do not set a value other than the described values in each parameter.

POINT

- When you connect the amplifier to a servo system controller, servo parameter values of the servo system controller will be written to each parameter.
- Some parameters and their ranges may not be configured depending on the servo system controller model, servo amplifier software version, and MR Configurator2 software version. For details, refer to the servo system controller user's manual. Check the software version of the servo amplifier using MR Configurator2.

5.1 Parameter list

POINT

- The parameter whose symbol is preceded by * is enabled with the following conditions:
  *: To enable the parameter value, power off the servo amplifier for 1 s or longer and power on the amplifier or reset the controller after setting the parameter. However, the time will be longer depending on a setting value of [Pr. PF25 Instantaneous power failure tough drive - Detection time] when "instantaneous power failure tough drive selection" is enabled in [Pr. PA20].
  **: To enable the parameter value, power off the servo amplifier for 1 s or longer and power on the amplifier. However, the time will be longer depending on a setting value of [Pr. PF25 Instantaneous power failure tough drive - Detection time] when "instantaneous power failure tough drive selection" is enabled in [Pr. PA20].

5.1.1 Basic setting parameters ([Pr. PA_ _])

No.	Symbol	Name	Initial value	Unit
PA01		For manufacturer setting	1000h	
PA02	**REG	Regenerative option	0000h	
PA03	*ABS	Absolute position detection system	0000h	
PA04	*AOP1	Function selection A-1	2000h	
PA05		For manufacturer setting	10000	
PA06			1	
PA07			1	
PA08	ATU	Auto tuning mode	0001h	
PA09	RSP	Auto tuning response	16	
PA10	INP	In-position range	100	[pulse]
PA11		For manufacturer setting	1000.0	
PA12			1000.0	
PA13			0000h	
PA14	*POL	Rotation direction selection	0	
PA15		For manufacturer setting	0	
PA16			0	
PA17			0000h	
PA18			0000h	
PA19	*BLK	Parameter writing inhibit	00AAh	
PA20	*TDS	Tough drive setting	0000h	
PA21	*AOP3	Function selection A-3	0001h	
PA22		For manufacturer setting	0000h	
PA23	DRAT	Drive recorder arbitrary alarm trigger setting	0000h	
PA24	AOP4	Function selection A-4	0000h	
PA25	OTHOV	One-touch tuning - Overshoot permissible level	0	[%]
PA26	*AOP5	Function selection A-5	0000h	
PA27	*HTL	Hot line forced stop function	0000h	
PA28		For manufacturer setting	0000h	
PA29			0000h	
PA30			0000h	
PA31			0000h	
PA32			0000h	

5.1.2 Gain/filter setting parameters ([Pr. PB_ _])

No.	Symbol	Name	Initial value	Unit
PB01	FILT	Adaptive tuning mode (adaptive filter II)	0000h	
PB02	VRFT	Vibration suppression control tuning mode (advanced vibration suppression control II)	0000h	
PB03	TFBGN	Torque feedback loop gain	18000	[rad/s]
PB04	FFC	Feed forward gain	0	[%]
PB05		For manufacturer setting	500	
PB06	GD2	Load to motor inertia ratio	7.00	[Multiplier]
PB07	PG1	Model loop gain	15.0	[rad/s]
PB08	PG2	Position loop gain	37.0	[rad/s]
PB09	VG2	Speed loop gain	823	[rad/s]
PB10	VIC	Speed integral compensation	33.7	[ms]
PB11	VDC	Speed differential compensation	980	
PB12	OVA	Overshoot amount compensation	0	[%]
PB13	NH1	Machine resonance suppression filter 1	4500	[Hz]
PB14	NHQ1	Notch shape selection 1	0000h	
PB15	NH2	Machine resonance suppression filter 2	4500	[Hz]
PB16	NHQ2	Notch shape selection 2	0000h	
PB17	NHF	Shaft resonance suppression filter	0000h	
PB18	LPF	Low-pass filter setting	3141	[rad/s]
PB19	VRF11	Vibration suppression control 1 - Vibration frequency	100.0	[Hz]
PB20	VRF12	Vibration suppression control 1 - Resonance frequency	100.0	[Hz]
PB21	VRF13	Vibration suppression control 1 - Vibration frequency damping	0.00	
PB22	VRF14	Vibration suppression control 1 - Resonance frequency damping	0.00	
PB23	VFBF	Low-pass filter selection	0000h	
PB24	*MVS	Slight vibration suppression control	0000h	
PB25	*BOP1	Function selection B-1	0000h	
PB26	*CDP	Gain switching function	0000h	
PB27	CDL	Gain switching condition	10	[kpulse/s]/ [pulse]/ [r/min]
PB28	CDT	Gain switching time constant	1	[ms]
PB29	GD2B	Load to motor inertia ratio after gain switching	7.00	[Multiplier]
PB30	PG2B	Position loop gain after gain switching	0.0	[rad/s]
PB31	VG2B	Speed loop gain after gain switching	0	[rad/s]
PB32	VICB	Speed integral compensation after gain switching	0.0	[ms]
PB33	VRF11B	Vibration suppression control 1 - Vibration frequency after gain switching	0.0	[Hz]
PB34	VRF12B	Vibration suppression control 1 - Resonance frequency after gain switching	0.0	[Hz]
PB35	VRF13B	Vibration suppression control 1 - Vibration frequency damping after gain switching	0.00	
PB36	VRF14B	Vibration suppression control 1 - Resonance frequency damping after gain switching	0.00	
PB37		For manufacturer setting	1600	
PB38			0.00	
PB39			0.00	
PB40			0.00	
PB41			0	
PB42			0	
PB43			0000h	
PB44			0.00	
PB45	CNHF	Command notch filter	0000h	

No.	Symbol	Name	Initial value	Unit
PB46	NH3	Machine resonance suppression filter 3	4500	[Hz]
PB47	NHQ3	Notch shape selection 3	0000h	
PB48	NH4	Machine resonance suppression filter 4	4500	[Hz]
PB49	NHQ4	Notch shape selection 4	0000h	
PB50	NH5	Machine resonance suppression filter 5	4500	[Hz]
PB51	NHQ5	Notch shape selection 5	0000h	
PB52	VRF21	Vibration suppression control 2 - Vibration frequency	100.0	[Hz]
PB53	VRF22	Vibration suppression control 2 - Resonance frequency	100.0	[Hz]
PB54	VRF23	Vibration suppression control 2 - Vibration frequency damping	0.00	
PB55	VRF24	Vibration suppression control 2 - Resonance frequency damping	0.00	
PB56	VRF21B	Vibration suppression control 2 - Vibration frequency after gain switching	0.0	[Hz]
PB57	VRF22B	Vibration suppression control 2 - Resonance frequency after gain switching	0.0	[Hz]
PB58	VRF23B	Vibration suppression control 2 - Vibration frequency damping after gain switching	0.00	
PB59	VRF24B	Vibration suppression control 2 - Resonance frequency damping after gain switching	0.00	
PB60	PG1B	Model loop gain after gain switching	0.0	[rad/s]
PB61		For manufacturer setting	0.0	
PB62			0000h	
PB63			0000h	
PB64			0000h	

5.1.3 Extension setting parameters ([Pr. PC_ _])

No.	Symbol	Name	Initial value	Unit
PC01	ERZ	Error excessive alarm level	0	[rev]
PC02	MBR	Electromagnetic brake sequence output	0	[ms]
PC03		For manufacturer setting	0000h	
PC04	**COP1	Function selection C-1	0020h	
PC05	**COP2	Function selection C-2	0000h	
PC06	*COP3	Function selection C-3	0000h	
PC07	ZSP	Zero speed	50	[r/min]
PC08	OSL	Overspeed alarm detection level	0	[r/min]
PC09		For manufacturer setting	0000h	
PC10			0000h	
PC11			0	
PC12			0	
PC13			0	
PC14			0	
PC15			0	
PC16			0000h	
PC17	**COP4	Function selection C-4	0000h	
PC18	*COP5	Function selection C-5	0000h	
PC19		For manufacturer setting	0000h	
PC20	*COP7	Function selection C-7	0000h	

No.	Symbol	Name	Initial value	Unit
PC21	*BPS	Alarm history clear	0000h	
PC22		For manufacturer setting	0	
PC23			0000h	
PC24	RSBR	Forced stop deceleration time constant	100	[ms]
PC25		For manufacturer setting	0	
PC26			0000h	
PC27			0000h	
PC28			0000h	
PC29	*COPB	Function selection C-B	0000h	
PC30		For manufacturer setting	0	
PC31	RSUP1	Vertical axis freefall prevention compensation amount	0	[0.0001rev]
PC32		For manufacturer setting	0000h	
PC33			0	
PC34			100	
PC35			0000h	
PC36			0000h	
PC37			0000h	
PC38	ERW	Error excessive warning level	0	[rev]
PC39		For manufacturer setting	0000h	
PC40			0000h	
PC41			0000h	
PC42			0000h	
PC43			0000h	
PC44			0000h	
PC45			0000h	
PC46			0000h	
PC47			0000h	
PC48			0000h	
PC49			0000h	
PC50			0000h	
PC51			0000h	
PC52			0000h	
PC53			0000h	
PC54			0000h	
PC55			0000h	
PC56			0000h	
PC57			0000h	
PC58			0000h	
PC59			0000h	
PC60			0000h	
PC61			0000h	
PC62			0000h	
PC63			0000h	
PC64			0000h	

5.1.4 I/O setting parameters ([Pr. PD_ _])

No.	Symbol	Name	Initial value	Unit
PD01		For manufacturer setting	0000h	
PD02			0000h	
PD03			0000h	
PD04			0000h	
PD05			0000h	
PD06			0000h	
PD07	*DO1	Output device selection 1	0005h	
PD08		For manufacturer setting	0000h	
PD09			0000h	
PD10		For manufacturer setting	0000h	
PD11	*DIF	Input filter setting (Note)	0004h	
PD12		For manufacturer setting	0000h	
PD13	*DOP2	Function selection D-2	0000h	
PD14	*DOP3	Function selection D-3	0000h	
PD15		For manufacturer setting	0000h	
PD16			0000h	
PD17			0000h	
PD18			0000h	
PD19			0000h	
PD20			0	
PD21			0	
PD22			0	
PD23			0	
PD24			0000h	
PD25			0000h	
PD26			0000h	
PD27			0000h	
PD28			0000h	
PD29			0000h	
PD30			0	
PD31			0	
PD32			0	
PD33			0000h	
PD34			0000h	
PD35			0000h	
PD36			0000h	
PD37			0000h	
PD38			0000h	
PD39			0000h	
PD40			0000h	
PD41			0000h	
PD42			0000h	
PD43			0000h	
PD44			0000h	
PD45			0000h	
PD46			0000h	
PD47			0000h	
PD48			0000h	

Note. Refer to the servo system controller instruction manual for the setting.

5.1.5 Extension setting 2 parameters ([Pr. PE_ _])

No.	Symbol	Name	Initial value	Unit
PE01		For manufacturer setting	0000h	
PE02			0000h	
PE03			0000h	
PE04			0	
PE05			0	
PE06			0	
PE07			0	
PE08			0	
PE09			0000h	
PE10			0000h	
PE11			0000h	
PE12			0000h	
PE13			0000h	
PE14			0111h	
PE15			20	
PE16			0000h	
PE17			0000h	
PE18			0000h	
PE19			0000h	
PE20			0000h	
PE21			0000h	
PE22			0000h	
PE23			0000h	
PE24			0000h	
PE25			0000h	
PE26			0000h	
PE27			0000h	
PE28			0000h	
PE29			0000h	
PE30			0000h	
PE31			0000h	
PE32			0000h	
PE33			0000h	
PE34			0	
PE35			0	
PE36			0.0	
PE37			0.00	
PE38			0.00	
PE39			0	
PE40			0000h	
PE41	EOP3	Function selection E-3	0000h	
PE42		For manufacturer setting	0	
PE43			0.0	
PE44	LMCP	Lost motion compensation positive-side compensation value selection	0	[0.01%]
PE45	LMCN	Lost motion compensation negative-side compensation value selection	0	[0.01%]
PE46	LMFLT	Lost motion filter setting	0	[0.1 ms]
PE47	TOF	Torque offset	0	[0.01%]
PE48	*LMOP	Lost motion compensation function selection	0000h	
PE49	LMCD	Lost motion compensation timing	0	[0.1 ms]
PE50	LMCT	Lost motion compensation non-sensitive band	0	[pulse]/ [kpulse]

No.	Symbol	Name	Initial value	Unit
PE51		For manufacturer setting	0000h	
PE52			0000h	
PE53			0000h	
PE54			0000h	
PE55			0000h	
PE56			0000h	
PE57			0000h	
PE58			0000h	
PE59			0000h	
PE60			0000h	
PE61			0.00	
PE62			0.00	
PE63			0.00	
PE64			0.00	

5.1.6 Extension setting 3 parameters ([Pr. PF_ _])

No.	Symbol	Name	Initial value	Unit
PF01		For manufacturer setting	0000h	
PF02			0000h	
PF03			0000h	
PF04			0	
PF05			0000h	
PF06	*FOP5	Function selection F-5	0003h	
PF07		For manufacturer setting	0000h	
PF08			0000h	
PF09			0	
PF10			0	
PF11			0	
PF12	DBT	Electronic dynamic brake operating time	2000	[ms]
PF13		For manufacturer setting	0000h	
PF14			10	
PF15			0000h	
PF16			0000h	
PF17			0000h	
PF18			0000h	
PF19			0000h	
PF20			0000h	
PF21	DRT	Drive recorder switching time setting	0	[s]
PF22		For manufacturer setting	200	
PF23	OSCL1	Vibration tough drive - Oscillation detection level	50	[%]
PF24	*OSCL2	Vibration tough drive function selection	0000h	
PF25	CVAT	Instantaneous power failure tough drive - Detection time	200	[ms]
PF26		For manufacturer setting	0	
PF27			0	
PF28			0	
PF29			0000h	
PF30			0	

No.	Symbol	Name	Initial value	Unit
PF31	FRIC	Machine diagnosis function - Friction judgement speed	0	[r/min]
PF32		For manufacturer setting	50	
PF33			0000h	
PF34			0000h	
PF35			0000h	
PF36			0000h	
PF37			0000h	
PF38			0000h	
PF39			0000h	
PF40			0000h	
PF41			0000h	
PF42			0000h	
PF43			0000h	
PF44			0	
PF45			0000h	
PF46			0000h	
PF47			0000h	
PF48			0000h	

5.2 Detailed list of parameters

POINT
●Set a value in each "x" in the "Setting digit" columns.

5.2.1 Basic setting parameters ([Pr. PA_ _])

<table>
<tr><th>No.</th><th>Symbol</th><th>Name and function</th><th>Initial value [unit]</th><th>Setting range</th></tr>
<tr><td>PA02</td><td>**REG</td><td>Regenerative option
Select a regenerative option.
Incorrect setting may cause the regenerative option to burn.
If a selected regenerative option is not for use with the servo amplifier, [AL. 37 Parameter error] occurs.
<table>
<tr><th>Setting digit</th><th>Explanation</th><th>Initial value</th></tr>
<tr><td>_ _ x x</td><td>Regenerative option selection
00: No regenerative option is used.
・For a servo amplifier of 200 W or less, no regenerative resistor is used.
・For a servo amplifier of 0.4 kW to 3 kW, a built-in regenerative resistor is used.
02: MR-RB032
03: MR-RB12
04: MR-RB32
05: MR-RB30
06: MR-RB50 (A cooling fan is required.)</td><td>00h</td></tr>
<tr><td>_ x _ _</td><td rowspan="2">For manufacturer setting</td><td>0h</td></tr>
<tr><td>x _ _ _</td><td>0h</td></tr>
</table></td><td colspan="2">Refer to the "Name and function" column.</td></tr>
<tr><td>PA03</td><td>*ABS</td><td>Absolute position detection system
Set this parameter when using the absolute position detection system.
<table>
<tr><th>Setting digit</th><th>Explanation</th><th>Initial value</th></tr>
<tr><td>_ _ _ x</td><td>Absolute position detection system selection
0: Disabled (used in the incremental system)
1: Enabled (used in the absolute position detection system)</td><td>0h</td></tr>
<tr><td>_ _ x _</td><td rowspan="3">For manufacturer setting</td><td>0h</td></tr>
<tr><td>_ x _ _</td><td>0h</td></tr>
<tr><td>x _ _ _</td><td>0h</td></tr>
</table></td><td colspan="2">Refer to the "Name and function" column.</td></tr>
</table>

No.	Symbol	Name and function	Initial value [unit]	Setting range
PA04	*AOP1	Function selection A-1 Select the forced stop input and forced stop deceleration function.	Refer to the "Name and function" column.	

Setting digit	Explanation	Initial value
_ _ _ x	For manufacturer setting	0h
_ _ x _		0h
_ x _ _	Servo forced stop selection 0: Enabled (The forced stop input EM2 or EM1 is used.) 1: Disabled (The forced stop input EM2 and EM1 are not used.) Refer to table 5.1 for details.	0h
x _ _ _	Forced stop deceleration function selection 0: Forced stop deceleration function disabled (EM1 is used.) 2: Forced stop deceleration function enabled (EM2 is used.) Refer to table 5.1 for details.	2h

Table 5.1 Deceleration method

Setting value	EM2/EM1	Deceleration method	
		EM2 or EM1 is off.	The controller forced stop is enabled or an alarm occurs.
0 0 _ _	EM1	MBR (Electromagnetic brake interlock) turns off without the forced stop deceleration.	MBR (Electromagnetic brake interlock) turns off without the forced stop deceleration.
2 0 _ _	EM2	MBR (Electromagnetic brake interlock) turns off after the forced stop deceleration.	MBR (Electromagnetic brake interlock) turns off after the forced stop deceleration.
0 1 _ _	Not using EM2 or EM1		MBR (Electromagnetic brake interlock) turns off without the forced stop deceleration.
2 1 _ _	Not using EM2 or EM1		MBR (Electromagnetic brake interlock) turns off after the forced stop deceleration.

No.	Symbol	Name and function	Initial value [unit]	Setting range
PA08	ATU	Auto tuning mode Select the gain adjustment mode.	Refer to the "Name and function" column.	

Setting digit	Explanation	Initial value
_ _ _ x	Gain adjustment mode selection 0: 2 gain adjustment mode 1 (interpolation mode) 1: Auto tuning mode 1 2: Auto tuning mode 2 3: Manual mode 4: 2 gain adjustment mode 2 Refer to table 5.2 for details.	1h
_ _ x _	For manufacturer setting	0h
_ x _ _		0h
x _ _ _		0h

Table 5.2 Gain adjustment mode selection

Setting value	Gain adjustment mode	Automatically adjusted parameter
_ _ _ 0	2 gain adjustment mode 1 (interpolation mode)	[Pr. PB06 Load to motor inertia ratio] [Pr. PB08 Position loop gain] [Pr. PB09 Speed loop gain] [Pr. PB10 Speed integral compensation]
_ _ _ 1	Auto tuning mode 1	[Pr. PB06 Load to motor inertia ratio] [Pr. PB07 Model loop gain] [Pr. PB08 Position loop gain] [Pr. PB09 Speed loop gain] [Pr. PB10 Speed integral compensation]
_ _ _ 2	Auto tuning mode 2	[Pr. PB07 Model loop gain] [Pr. PB08 Position loop gain] [Pr. PB09 Speed loop gain] [Pr. PB10 Speed integral compensation]
_ _ _ 3	Manual mode	
_ _ _ 4	2 gain adjustment mode 2	[Pr. PB08 Position loop gain] [Pr. PB09 Speed loop gain] [Pr. PB10 Speed integral compensation]

No.	Symbol	Name and function	Initial value [unit]	Setting range
PA09	RSP	Auto tuning response Set the auto tuning response.	16	1 to 40

Setting value	Machine characteristic	
	Response	Guideline for machine resonance frequency [Hz]
1	Low response	2.7
2		3.6
3		4.9
4		6.6
5		10.0
6		11.3
7		12.7
8		14.3
9		16.1
10		18.1
11		20.4
12		23.0
13		25.9
14		29.2
15		32.9
16		37.0
17		41.7
18		47.0
19	Middle response	52.9
20		59.6

Setting value	Machine characteristic	
	Response	Guideline for machine resonance frequency [Hz]
21	Middle response	67.1
22		75.6
23		85.2
24		95.9
25		108.0
26		121.7
27		137.1
28		154.4
29		173.9
30		195.9
31		220.6
32		248.5
33		279.9
34		315.3
35		355.1
36		400.0
37		446.6
38		501.2
39	High response	571.5
40		642.7

No.	Symbol	Name and function	Initial value [unit]	Setting range
PA10	INP	In-position range Set an in-position range per command pulse.	100 [pulse]	0 to 65535
PA14	*POL	Rotation direction selection Select the rotation direction of command input pulses.	0	0 to 1

Setting value	Servo motor rotation direction	
	Positioning address increase	Positioning address decrease
0	CCW	CW
1	CW	CCW

The following shows the servo motor rotation directions.

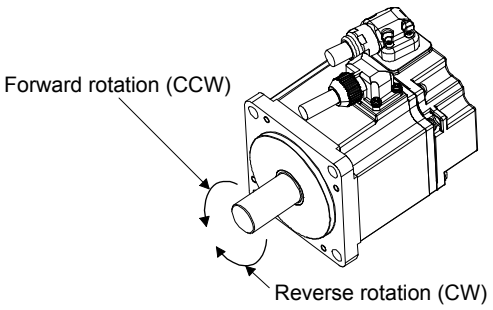

No.	Symbol	Name and function	Initial value [unit]	Setting range
PA19	*BLK	Parameter writing inhibit Select a reference range and writing range of parameters. Refer to table 5.3 for settings.	00AAh	Refer to the "Name and function" column.

Table 5.3 [Pr. PA19] setting value and reading/writing range

PA19	Setting operation	PA	PB	PC	PD	PE	PF
Other than below	Reading	○					
	Writing	○					
000Ah	Reading	Only 19					
	Writing	Only 19					
000Bh	Reading	○	○	○			
	Writing	○	○	○			
000Ch	Reading	○	○	○	○		
	Writing	○	○	○	○		
000Fh	Reading	○	○	○	○	○	
	Writing	○	○	○	○	○	
00AAh (initial value)	Reading	○	○	○	○	○	○
	Writing	○	○	○	○	○	○
100Bh	Reading	○					
	Writing	Only 19					
100Ch	Reading	○	○	○	○		
	Writing	Only 19					
100Fh	Reading	○	○	○	○	○	
	Writing	Only 19					
10AAh	Reading	○	○	○	○	○	○
	Writing	Only 19					

<table>
<tr><th>No.</th><th>Symbol</th><th>Name and function</th><th>Initial value [unit]</th><th>Setting range</th></tr>
<tr><td>PA20</td><td>*TDS</td><td>Tough drive setting
Alarms may not be avoided with the tough drive function depending on the situations of the power supply and load fluctuation.
You can assign MTTR (During tough drive) to the CN3-13 pin with [Pr. PD07].
<table>
<tr><th>Setting digit</th><th>Explanation</th><th>Initial value</th></tr>
<tr><td>_ _ _ x</td><td>For manufacturer setting</td><td>0h</td></tr>
<tr><td>_ _ x _</td><td>Vibration tough drive selection
0: Disabled
1: Enabled

Selecting "1" suppresses vibrations by automatically changing setting values of [Pr. PB13 Machine resonance suppression filter 1] and [Pr. PB15 Machine resonance suppression filter 2] in case that the vibration exceeds the value of the oscillation level set in [Pr. PF23].
Refer to section 7.3 for details.</td><td>0h</td></tr>
<tr><td>_ x _ _</td><td>Instantaneous power failure tough drive selection
0: Disabled
1: Enabled

Selecting "1" avoids triggering [AL. 10 Undervoltage] using the electrical energy charged in the capacitor in case that an instantaneous power failure occurs during operation. In [Pr. PF25 Instantaneous power failure tough drive - Detection time], set the time until the occurrence of [AL. 10.1 Voltage drop in the power]. When "1" is selected for this digit, the power should be off for the setting value of [Pr. PF25] + 1 s or longer before the power is cycled to enable a parameter whose symbol is preceded by "*" or "**".</td><td>0h</td></tr>
<tr><td>x _ _ _</td><td>For manufacturer setting</td><td>0h</td></tr>
</table></td><td colspan="2">Refer to the "Name and function" column.</td></tr>
<tr><td>PA21</td><td>*AOP3</td><td>Function selection A-3
<table>
<tr><th>Setting digit</th><th>Explanation</th><th>Initial value</th></tr>
<tr><td>_ _ _ x</td><td>One-touch tuning function selection
0: Disabled
1: Enabled

When the digit is "0", the one-touch tuning with MR Configurator2 will be disabled.</td><td>1h</td></tr>
<tr><td>_ _ x _</td><td rowspan="3">For manufacturer setting</td><td>0h</td></tr>
<tr><td>_ x _ _</td><td>0h</td></tr>
<tr><td>x _ _ _</td><td>0h</td></tr>
</table></td><td colspan="2">Refer to the "Name and function" column.</td></tr>
</table>

<table>
<tr><th>No.</th><th>Symbol</th><th>Name and function</th><th>Initial value [unit]</th><th>Setting range</th></tr>
<tr><td>PA23</td><td>DRAT</td><td>Drive recorder arbitrary alarm trigger setting
<table>
<tr><th>Setting digit</th><th>Explanation</th><th>Initial value</th></tr>
<tr><td>_ _ x x</td><td>Alarm detail No. setting
Set the digits when you execute the trigger with an arbitrary alarm detail No. for the drive recorder function.
When these digits are "0 0", only the arbitrary alarm No. setting will be enabled.</td><td>00h</td></tr>
<tr><td>x x _ _</td><td>Alarm No. setting
Set the digits when you execute the trigger with an arbitrary alarm No. for the drive recorder function.
When "0 0" are set, the arbitrary alarm trigger of the drive recorder will be disabled.</td><td>00h</td></tr>
</table>
Setting example:
To activate the drive recorder when [AL. 50 Overload 1] occurs, set "5 0 0 0".
To activate the drive recorder when [AL. 50.3 Thermal overload error 4 during operation] occurs, set "5 0 0 3".</td><td colspan="2">Refer to the "Name and function" column.</td></tr>
<tr><td>PA24</td><td>AOP4</td><td>Function selection A-4
<table>
<tr><th>Setting digit</th><th>Explanation</th><th>Initial value</th></tr>
<tr><td>_ _ _ x</td><td>Vibration suppression mode selection
0: Standard mode
1: 3 inertia mode
2: Low response mode
When two low resonance frequencies are generated, select "3 inertia mode (_ _ _ 1)". When the load to motor inertia ratio exceeds the recommended load to motor inertia ratio, select "Low response mode (_ _ _ 2)".
When you select the standard mode or low response mode, "Vibration suppression control 2" cannot be used.
When you select the 3 inertia mode, the feed forward gain cannot be used.
Before changing the control mode with the controller during the 3 inertia mode or low response mode, stop the motor.</td><td>0h</td></tr>
<tr><td>_ _ x _</td><td rowspan="3">For manufacturer setting</td><td>0h</td></tr>
<tr><td>_ x _ _</td><td>0h</td></tr>
<tr><td>x _ _ _</td><td>0h</td></tr>
</table></td><td colspan="2">Refer to the "Name and function" column.</td></tr>
</table>

<table>
<tr><th>No.</th><th>Symbol</th><th>Name and function</th><th>Initial value [unit]</th><th>Setting range</th></tr>
<tr><td>PA25</td><td>OTHOV</td><td>One-touch tuning - Overshoot permissible level
Set a permissible value of the overshoot amount for one-touch tuning as a percentage of the in-position range.
However, setting "0" will be 50%.</td><td>0
[%]</td><td>0 to 100</td></tr>
<tr><td>PA26</td><td>*AOP5</td><td>Function selection A-5
<table>
<tr><th>Setting digit</th><th>Explanation</th><th>Initial value</th></tr>
<tr><td>_ _ _ x</td><td>Torque limit function selection at instantaneous power failure (instantaneous power failure tough drive selection)
0: Disabled
1: Enabled
When an instantaneous power failure occurs during operation, you can save electric energy charged in the capacitor in the servo amplifier by limiting torque at acceleration. You can also delay the time until the occurrence of [AL. 10.2 Bus voltage drop] with the instantaneous power failure tough drive function. Doing this will enable you to set a longer time in [Pr. PF25 Instantaneous power failure tough drive - Detection time].
The torque limit function at instantaneous power failure is enabled when "instantaneous power failure tough drive selection" in [Pr. PA20] is "Enabled (_ 1 _ _)".</td><td>0h</td></tr>
<tr><td>_ _ x _</td><td rowspan="3">For manufacturer setting</td><td>0h</td></tr>
<tr><td>_ x _ _</td><td>0h</td></tr>
<tr><td>x _ _ _</td><td>0h</td></tr>
</table></td><td colspan="2">Refer to the "Name and function" column.</td></tr>
<tr><td>PA27</td><td>*HTL</td><td>Hot line forced stop function
<table>
<tr><th>Setting digit</th><th>Explanation</th><th>Initial value</th></tr>
<tr><td>_ _ _ x</td><td>Hot line forced stop function selection
0: Enabled
1: Disabled</td><td>0h</td></tr>
<tr><td>_ _ x _</td><td rowspan="3">For manufacturer setting</td><td>0h</td></tr>
<tr><td>_ x _ _</td><td>0h</td></tr>
<tr><td>x _ _ _</td><td>0h</td></tr>
</table></td><td colspan="2">Refer to the "Name and function" column.</td></tr>
</table>

5.2.2 Gain/filter setting parameters ([Pr. PB_ _])

<table>
<tr><th>No.</th><th>Symbol</th><th>Name and function</th><th>Initial value [unit]</th><th>Setting range</th></tr>
<tr><td>PB01</td><td>FILT</td><td>Adaptive tuning mode (adaptive filter II)
Set the adaptive filter tuning.
<table>
<tr><th>Setting digit</th><th>Explanation</th><th>Initial value</th></tr>
<tr><td>_ _ _ x</td><td>Filter tuning mode selection
Select the adjustment mode of the machine resonance suppression filter 1. Refer to section 7.1.2 for details.
0: Disabled
1: Automatic setting
2: Manual setting</td><td>0h</td></tr>
<tr><td>_ _ x _</td><td rowspan="3">For manufacturer setting</td><td>0h</td></tr>
<tr><td>_ x _ _</td><td>0h</td></tr>
<tr><td>x _ _ _</td><td>0h</td></tr>
</table></td><td colspan="2">Refer to the "Name and function" column.</td></tr>
<tr><td>PB02</td><td>VRFT</td><td>Vibration suppression control tuning mode (advanced vibration suppression control II)
Set the vibration suppression control tuning. Refer to section 7.1.5 for details.
<table>
<tr><th>Setting digit</th><th>Explanation</th><th>Initial value</th></tr>
<tr><td>_ _ _ x</td><td>Vibration suppression control 1 tuning mode selection
Select the tuning mode of the vibration suppression control 1.
0: Disabled
1: Automatic setting
2: Manual setting</td><td>0h</td></tr>
<tr><td>_ _ x _</td><td>Vibration suppression control 2 tuning mode selection
Select the tuning mode of the vibration suppression control 2. To enable the digit, select "3 inertia mode (_ _ _ 1)" of "Vibration suppression mode selection" in [Pr. PA24 Function selection A-4].
0: Disabled
1: Automatic setting
2: Manual setting</td><td>0h</td></tr>
<tr><td>_ x _ _</td><td rowspan="2">For manufacturer setting</td><td>0h</td></tr>
<tr><td>x _ _ _</td><td>0h</td></tr>
</table></td><td colspan="2">Refer to the "Name and function" column.</td></tr>
<tr><td>PB03</td><td>TFBGN</td><td>Torque feedback loop gain
Set a torque feedback loop gain in the continuous operation to torque control mode.
Decreasing the setting value will also decrease a collision load during continuous operation to torque control mode.
Setting a value of 6 rad/s or smaller will apply 6 rad/s.</td><td>18000 [rad/s]</td><td>0 to 18000</td></tr>
<tr><td>PB04</td><td>FFC</td><td>Feed forward gain
Set the feed forward gain.
When the setting is 100%, the droop pulses during operation at constant speed are nearly zero. However, sudden acceleration/deceleration will increase the overshoot. As a guideline, when the feed forward gain setting is 100%, set 1 s or longer as the acceleration time constant up to the rated speed.</td><td>0 [%]</td><td>0 to 100</td></tr>
</table>

<table>
<tr><th>No.</th><th>Symbol</th><th>Name and function</th><th>Initial value [unit]</th><th>Setting range</th></tr>
<tr><td>PB06</td><td>GD2</td><td>Load to motor inertia ratio
Set the load to motor inertia ratio.
The setting of this parameter will be the automatic setting or manual setting depending on the value set in [Pr. PA08]. Refer to the following table for details. When the parameter is automatic setting, the value will vary between 0.00 and 100.00.
<table>
<tr><th>Pr. PA08</th><th>This parameter</th></tr>
<tr><td>_ _ _ 0 (2 gain adjustment mode 1 (interpolation mode))</td><td rowspan="2">Automatic setting</td></tr>
<tr><td>_ _ _ 1 (Auto tuning mode 1)</td></tr>
<tr><td>_ _ _ 2 (Auto tuning mode 2)</td><td rowspan="3">Manual setting</td></tr>
<tr><td>_ _ _ 3 (Manual mode)</td></tr>
<tr><td>_ _ _ 4 (2 gain adjustment mode 2)</td></tr>
</table></td><td>7.00
[Multiplier]</td><td>0.00 to 300.00</td></tr>
<tr><td>PB07</td><td>PG1</td><td>Model loop gain
Set the response gain up to the target position.
Increasing the setting value will also increase the response level to the position command but will be liable to generate vibration and/or noise.
The setting of this parameter will be the automatic setting or manual setting depending on the value set in [Pr. PA08]. Refer to the following table for details.
<table>
<tr><th>Pr. PA08</th><th>This parameter</th></tr>
<tr><td>_ _ _ 0 (2 gain adjustment mode 1 (interpolation mode))</td><td>Manual setting</td></tr>
<tr><td>_ _ _ 1 (Auto tuning mode 1)</td><td rowspan="2">Automatic setting</td></tr>
<tr><td>_ _ _ 2 (Auto tuning mode 2)</td></tr>
<tr><td>_ _ _ 3 (Manual mode)</td><td rowspan="2">Manual setting</td></tr>
<tr><td>_ _ _ 4 (2 gain adjustment mode 2)</td></tr>
</table></td><td>15.0
[rad/s]</td><td>1.0 to 2000.0</td></tr>
<tr><td>PB08</td><td>PG2</td><td>Position loop gain
Set the gain of the position loop.
Set this parameter to increase the position response to load disturbance.
Increasing the setting value will also increase the response level to the load disturbance but will be liable to generate vibration and/or noise.
The setting of this parameter will be the automatic setting or manual setting depending on the value set in [Pr. PA08]. Refer to the following table for details.
<table>
<tr><th>Pr. PA08</th><th>This parameter</th></tr>
<tr><td>_ _ _ 0 (2 gain adjustment mode 1 (interpolation mode))</td><td rowspan="3">Automatic setting</td></tr>
<tr><td>_ _ _ 1 (Auto tuning mode 1)</td></tr>
<tr><td>_ _ _ 2 (Auto tuning mode 2)</td></tr>
<tr><td>_ _ _ 3 (Manual mode)</td><td>Manual setting</td></tr>
<tr><td>_ _ _ 4 (2 gain adjustment mode 2)</td><td>Automatic setting</td></tr>
</table></td><td>37.0
[rad/s]</td><td>1.0 to 2000.0</td></tr>
<tr><td>PB09</td><td>VG2</td><td>Speed loop gain
Set the gain of the speed loop.
Set this parameter when vibration occurs on machines having low rigidity or large backlash.
Increasing the setting value will also increase the response level but will be liable to generate vibration and/or noise.
The setting of this parameter will be the automatic setting or manual setting depending on the value set in [Pr. PA08]. Refer to the table of [Pr. PB08] for details.</td><td>823
[rad/s]</td><td>20 to 65535</td></tr>
<tr><td>PB10</td><td>VIC</td><td>Speed integral compensation
Set the integral time constant of the speed loop.
Decreasing the setting value will increase the response level but will be liable to generate vibration and/or noise.
The setting of this parameter will be the automatic setting or manual setting depending on the value set in [Pr. PA08]. Refer to the table of [Pr. PB08] for details.</td><td>33.7
[ms]</td><td>0.1 to 1000.0</td></tr>
</table>

<table>
<tr><th>No.</th><th>Symbol</th><th>Name and function</th><th>Initial value [unit]</th><th>Setting range</th></tr>
<tr><td>PB11</td><td>VDC</td><td>Speed differential compensation
Set the differential compensation.
To enable the parameter, select "Continuous PID control enabled (_ _ 3 _)" of "PI-PID switching control selection" in [Pr. PB24].</td><td>980</td><td>0 to 1000</td></tr>
<tr><td>PB12</td><td>OVA</td><td>Overshoot amount compensation
Set a viscous friction torque in percentage to the rated torque at servo motor rated speed.
When the response level is low, or when the torque is limited, the efficiency of the parameter can be lower.</td><td>0 [%]</td><td>0 to 100</td></tr>
<tr><td>PB13</td><td>NH1</td><td>Machine resonance suppression filter 1
Set the notch frequency of the machine resonance suppression filter 1.
When "Automatic setting (_ _ _ 1)" of "Filter tuning mode selection" is selected in [Pr. PB01], the adjustment result will be reflected.
When you select "Manual setting (_ _ _ 2)" of "Filter tuning mode selection" in [Pr. PB01], the setting value will be enabled.</td><td>4500 [Hz]</td><td>10 to 4500</td></tr>
<tr><td>PB14</td><td>NHQ1</td><td>Notch shape selection 1
Set forms of the machine resonance suppression filter 1.
When "Automatic setting (_ _ _ 1)" of "Filter tuning mode selection" is selected in [Pr. PB01], the adjustment result will be reflected.
Set this parameter manually when the manual setting is selected.
<table>
<tr><th>Setting digit</th><th>Explanation</th><th>Initial value</th></tr>
<tr><td>_ _ _ x</td><td>For manufacturer setting</td><td>0h</td></tr>
<tr><td>_ _ x _</td><td>Notch depth selection
0: -40 dB
1: -14 dB
2: -8 dB
3: -4 dB</td><td>0h</td></tr>
<tr><td>_ x _ _</td><td>Notch width selection
0: α = 2
1: α = 3
2: α = 4
3: α = 5</td><td>0h</td></tr>
<tr><td>x _ _ _</td><td>For manufacturer setting</td><td>0h</td></tr>
</table></td><td colspan="2">Refer to the "Name and function" column.</td></tr>
<tr><td>PB15</td><td>NH2</td><td>Machine resonance suppression filter 2
Set the notch frequency of the machine resonance suppression filter 2.
To enable the setting value, select "Enabled (_ _ _ 1)" of "Machine resonance suppression filter 2 selection" in [Pr. PB16].</td><td>4500 [Hz]</td><td>10 to 4500</td></tr>
<tr><td>PB16</td><td>NHQ2</td><td>Notch shape selection 2
Set forms of the machine resonance suppression filter 2.
<table>
<tr><th>Setting digit</th><th>Explanation</th><th>Initial value</th></tr>
<tr><td>_ _ _ x</td><td>Machine resonance suppression filter 2 selection
0: Disabled
1: Enabled</td><td>0h</td></tr>
<tr><td>_ _ x _</td><td>Notch depth selection
0: -40 dB
1: -14 dB
2: -8 dB
3: -4 dB</td><td>0h</td></tr>
<tr><td>_ x _ _</td><td>Notch width selection
0: α = 2
1: α = 3
2: α = 4
3: α = 5</td><td>0h</td></tr>
<tr><td>x _ _ _</td><td>For manufacturer setting</td><td>0h</td></tr>
</table></td><td colspan="2">Refer to the "Name and function" column.</td></tr>
</table>

<table>
<tr><th>No.</th><th>Symbol</th><th>Name and function</th><th>Initial value [unit]</th><th>Setting range</th></tr>
<tr><td>PB17</td><td>NHF</td><td>Shaft resonance suppression filter
Set the shaft resonance suppression filter.
Use this parameter to suppress a low-frequency machine vibration.
When you select "Automatic setting (_ _ _ 0)" of "Shaft resonance suppression filter selection" in [Pr. PB23], the value will be calculated automatically from the servo motor you use and load to motor inertia ratio. Set this parameter manually when "Manual setting (_ _ _ 1)" is selected.
When "Shaft resonance suppression filter selection" is "Disabled (_ _ _ 2)" in [Pr. PB23], the setting value of this parameter will be disabled.
When you select "Enabled (_ _ _ 1)" of "Machine resonance suppression filter 4 selection" in [Pr. PB49], the shaft resonance suppression filter cannot be used.
<table>
<tr><th>Setting digit</th><th>Explanation</th><th>Initial value</th></tr>
<tr><td>_ _ x x</td><td>Shaft resonance suppression filter setting frequency selection
Set the shaft resonance suppression filter.
Refer to table 5.4 for settings.
Set the value closest to the frequency you need.</td><td>00h</td></tr>
<tr><td>_ x _ _</td><td>Notch depth selection
0: -40 dB
1: -14 dB
2: -8 dB
3: -4 dB</td><td>0h</td></tr>
<tr><td>x _ _ _</td><td>For manufacturer setting</td><td>0h</td></tr>
</table>
Table 5.4 Shaft resonance suppression filter setting frequency selection
<table>
<tr><th>Setting value</th><th>Frequency [Hz]</th><th>Setting value</th><th>Frequency [Hz]</th></tr>
<tr><td>00</td><td>Disabled</td><td>10</td><td>562</td></tr>
<tr><td>01</td><td>Disabled</td><td>11</td><td>529</td></tr>
<tr><td>02</td><td>4500</td><td>12</td><td>500</td></tr>
<tr><td>03</td><td>3000</td><td>13</td><td>473</td></tr>
<tr><td>04</td><td>2250</td><td>14</td><td>450</td></tr>
<tr><td>05</td><td>1800</td><td>15</td><td>428</td></tr>
<tr><td>06</td><td>1500</td><td>16</td><td>409</td></tr>
<tr><td>07</td><td>1285</td><td>17</td><td>391</td></tr>
<tr><td>08</td><td>1125</td><td>18</td><td>375</td></tr>
<tr><td>09</td><td>1000</td><td>19</td><td>360</td></tr>
<tr><td>0A</td><td>900</td><td>1A</td><td>346</td></tr>
<tr><td>0B</td><td>818</td><td>1B</td><td>333</td></tr>
<tr><td>0C</td><td>750</td><td>1C</td><td>321</td></tr>
<tr><td>0D</td><td>692</td><td>1D</td><td>310</td></tr>
<tr><td>0E</td><td>642</td><td>1E</td><td>300</td></tr>
<tr><td>0F</td><td>600</td><td>1F</td><td>290</td></tr>
</table></td><td>Refer to the "Name and function" column.</td><td></td></tr>
<tr><td>PB18</td><td>LPF</td><td>Low-pass filter setting
Set the low-pass filter.
The following shows a relation of a required parameter to this parameter.
<table>
<tr><th>[Pr. PB23]</th><th>[Pr. PB18]</th></tr>
<tr><td>_ _ 0 _ (Initial value)</td><td>Automatic setting</td></tr>
<tr><td>_ _ 1 _</td><td>Setting value enabled</td></tr>
<tr><td>_ _ 2 _</td><td>Setting value disabled</td></tr>
</table></td><td>3141 [rad/s]</td><td>100 to 18000</td></tr>
</table>

<table>
<tr><th>No.</th><th>Symbol</th><th>Name and function</th><th>Initial value [Unit]</th><th>Setting range</th></tr>
<tr><td>PB19</td><td>VRF11</td><td>Vibration suppression control 1 - Vibration frequency
Set the vibration frequency for the vibration suppression control 1 to suppress low-frequency machine vibration.
When "Vibration suppression control 1 tuning mode selection" is "Automatic setting (_ _ _ 1)" in [Pr. PB02], this parameter will be set automatically. Set this parameter manually when "Manual setting (_ _ _ 2)" is selected. Refer to section 7.1.5 for details.</td><td>100.0
[Hz]</td><td>0.1
to
300.0</td></tr>
<tr><td>PB20</td><td>VRF12</td><td>Vibration suppression control 1 - Resonance frequency
Set the resonance frequency for the vibration suppression control 1 to suppress low-frequency machine vibration.
When "Vibration suppression control 1 tuning mode selection" is "Automatic setting (_ _ _ 1)" in [Pr. PB02], this parameter will be set automatically. Set this parameter manually for "Manual setting (_ _ _ 2)". Refer to section 7.1.5 for details.</td><td>100.0
[Hz]</td><td>0.1
to
300.0</td></tr>
<tr><td>PB21</td><td>VRF13</td><td>Vibration suppression control 1 - Vibration frequency damping
Set a damping of the vibration frequency for the vibration suppression control 1 to suppress low-frequency machine vibration.
When "Vibration suppression control 1 tuning mode selection" is "Automatic setting (_ _ _ 1)" in [Pr. PB02], this parameter will be set automatically. Set this parameter manually for "Manual setting (_ _ _ 2)". Refer to section 7.1.5 for details.</td><td>0.00</td><td>0.00
to
0.30</td></tr>
<tr><td>PB22</td><td>VRF14</td><td>Vibration suppression control 1 - Resonance frequency damping
Set a damping of the resonance frequency for the vibration suppression control 1 to suppress low-frequency machine vibration.
When "Vibration suppression control 1 tuning mode selection" is "Automatic setting (_ _ _ 1)" in [Pr. PB02], this parameter will be set automatically. Set this parameter manually for "Manual setting (_ _ _ 2)". Refer to section 7.1.5 for details.</td><td>0.00</td><td>0.00
to
0.30</td></tr>
<tr><td>PB23</td><td>VFBF</td><td>Low-pass filter selection
Select the shaft resonance suppression filter and low-pass filter.
<table>
<tr><th>Setting digit</th><th>Explanation</th><th>Initial value</th></tr>
<tr><td>_ _ _ x</td><td>Shaft resonance suppression filter selection
0: Automatic setting
1: Manual setting
2: Disabled
When you select "Enabled (_ _ _ 1)" of "Machine resonance suppression filter 4 selection" in [Pr. PB49], the shaft resonance suppression filter cannot be used.</td><td>0h</td></tr>
<tr><td>_ _ x _</td><td>Low-pass filter selection
0: Automatic setting
1: Manual setting
2: Disabled</td><td>0h</td></tr>
<tr><td>_ x _ _</td><td rowspan="2">For manufacturer setting</td><td>0h</td></tr>
<tr><td>x _ _ _</td><td>0h</td></tr>
</table></td><td colspan="2">Refer to the "Name and function" column.</td></tr>
</table>

<table>
<tr><th>No.</th><th>Symbol</th><th>Name and function</th><th>Initial value [Unit]</th><th>Setting range</th></tr>
<tr><td>PB24</td><td>*MVS</td><td>Slight vibration suppression control
Select the slight vibration suppression control and PI-PID switching control.
<table>
<tr><th>Setting digit</th><th>Explanation</th><th>Initial value</th></tr>
<tr><td>_ _ _ x</td><td>Slight vibration suppression control selection
0: Disabled
1: Enabled
To enable the slight vibration suppression control, select "Manual mode (_ _ _ 3)" of "Gain adjustment mode selection" in [Pr. PA08].
The slight vibration suppression control selection cannot be used in the speed control mode.</td><td>0h</td></tr>
<tr><td>_ _ x _</td><td>PI-PID switching control selection
0: PI control enabled
(Switching to PID control is possible with commands of the servo system controller.)
3: Continuous PID control enabled
If the servo motor at a stop is rotated even one pulse due to any external factor, it generates torque to compensate for a position shift. When the servo motor shaft is to be locked mechanically after positioning completion (stop), enabling the PID control and completing positioning simultaneously will suppress the unnecessary torque generated to compensate for a position shift.</td><td>0h</td></tr>
<tr><td>_ x _ _</td><td rowspan="2">For manufacturer setting</td><td>0h</td></tr>
<tr><td>x _ _ _</td><td>0h</td></tr>
</table></td><td colspan="2">Refer to the "Name and function" column.</td></tr>
<tr><td>PB25</td><td>*BOP1</td><td>Function selection B-1
Select whether to enable or disable the model adaptive control.
<table>
<tr><th>Setting digit</th><th>Explanation</th><th>Initial value</th></tr>
<tr><td>_ _ _ x</td><td>Model adaptive control selection
0: Enabled (model adaptive control)
2: Disabled (PID control)</td><td>0h</td></tr>
<tr><td>_ _ x _</td><td rowspan="3">For manufacturer setting</td><td>0h</td></tr>
<tr><td>_ x _ _</td><td>0h</td></tr>
<tr><td>x _ _ _</td><td>0h</td></tr>
</table></td><td colspan="2">Refer to the "Name and function" column.</td></tr>
</table>

<table>
<tr><th>No.</th><th>Symbol</th><th>Name and function</th><th>Initial value [Unit]</th><th>Setting range</th></tr>
<tr><td>PB26</td><td>*CDP</td><td>Gain switching function
Select the gain switching condition.
Set conditions to enable the gain switching values set in [Pr. PB29] to [Pr. PB36] and [Pr. PB56] to [Pr. PB60].
<table>
<tr><th>Setting digit</th><th>Explanation</th><th>Initial value</th></tr>
<tr><td>_ _ _ x</td><td>Gain switching selection
0: Disabled
1: Control command from controller is enabled
2: Command frequency
3: Droop pulses
4: Servo motor speed</td><td>0h</td></tr>
<tr><td>_ _ x _</td><td>Gain switching condition selection
0: Gain after switching is enabled with gain switching condition or more
1: Gain after switching is enabled with gain switching condition or less</td><td>0h</td></tr>
<tr><td>_ x _ _</td><td>Gain switching time constant disabled condition selection
0: Switching time constant is enabled.
1: Switching time constant is disabled.
2: Return time constant is disabled.
Refer to section 7.2.4 for details.</td><td>0h</td></tr>
<tr><td>x _ _ _</td><td>For manufacturer setting</td><td>0h</td></tr>
</table></td><td>Refer to the "Name and function" column.</td><td></td></tr>
<tr><td>PB27</td><td>CDL</td><td>Gain switching condition
Set the value of the gain switching (command frequency, droop pulses, or servo motor speed) selected in [Pr. PB26].
The set value unit differs depending on the switching condition item. (Refer to section 7.2.3.)</td><td>10
[kpulse/s]
/[pulse]
/[r/min]</td><td>0 to 65535</td></tr>
<tr><td>PB28</td><td>CDT</td><td>Gain switching time constant
Set the time constant at which the gains will change in response to the conditions set in [Pr. PB26] and [Pr. PB27].</td><td>1
[ms]</td><td>0 to 100</td></tr>
<tr><td>PB29</td><td>GD2B</td><td>Load to motor inertia ratio after gain switching
Set the load to motor inertia ratio when gain switching is enabled.
This parameter is enabled only when you select "Manual mode (_ _ _ 3)" of "Gain adjustment mode selection" in [Pr. PA08].</td><td>7.00
[Multiplier]</td><td>0.00 to 300.00</td></tr>
<tr><td>PB30</td><td>PG2B</td><td>Position loop gain after gain switching
Set the position loop gain for when the gain switching is enabled.
When you set a value smaller than 1.0 rad/s, the value will be the same as the value set in [Pr. PB08].
This parameter is enabled only when you select "Manual mode (_ _ _ 3)" of "Gain adjustment mode selection" in [Pr. PA08].</td><td>0.0
[rad/s]</td><td>0.0 to 2000.0</td></tr>
<tr><td>PB31</td><td>VG2B</td><td>Speed loop gain after gain switching
Set the speed loop gain for when the gain switching is enabled.
When you set a value smaller than 20 rad/s, the value will be the same as the value set in [Pr. PB09].
This parameter is enabled only when you select "Manual mode (_ _ _ 3)" of "Gain adjustment mode selection" in [Pr. PA08].</td><td>0
[rad/s]</td><td>0 to 65535</td></tr>
</table>

No.	Symbol	Name and function	Initial value [Unit]	Setting range
PB32	VICB	Speed integral compensation after gain switching Set the speed integral compensation for when the gain switching is enabled. When you set a value smaller than 0.1 ms, the value will be the same as the value set in [Pr. PB10]. This parameter is enabled only when you select "Manual mode (_ _ _ 3)" of "Gain adjustment mode selection" in [Pr. PA08].	0.0 [ms]	0.0 to 5000.0
PB33	VRF11B	Vibration suppression control 1 - Vibration frequency after gain switching Set the vibration frequency for the vibration suppression control 1 for when the gain switching is enabled. When you set a value smaller than 0.1 Hz, the value will be the same as the value set in [Pr. PB19]. This parameter will be enabled only when the following conditions are fulfilled. ・"Gain adjustment mode selection" in [Pr. PA08] is "Manual mode (_ _ _ 3)". ・"Vibration suppression control 1 tuning mode selection" in [Pr. PB02] is "Manual setting (_ _ _ 2)". ・"Gain switching selection" in [Pr. PB26] is "Control command from controller is enabled (_ _ _ 1)". Switching during driving may cause a shock. Always switch gain after the servo motor stops.	0.0 [Hz]	0.0 to 300.0
PB34	VRF12B	Vibration suppression control 1 - Resonance frequency after gain switching Set the resonance frequency for the vibration suppression control 1 for when the gain switching is enabled. When you set a value smaller than 0.1 Hz, the value will be the same as the value set in [Pr. PB20]. This parameter will be enabled only when the following conditions are fulfilled. ・"Gain adjustment mode selection" in [Pr. PA08] is "Manual mode (_ _ _ 3)". ・"Vibration suppression control 1 tuning mode selection" in [Pr. PB02] is "Manual setting (_ _ _ 2)". ・"Gain switching selection" in [Pr. PB26] is "Control command from controller is enabled (_ _ _ 1)". Switching during driving may cause a shock. Always switch gain after the servo motor stops.	0.0 [Hz]	0.0 to 300.0
PB35	VRF13B	Vibration suppression control 1 - Vibration frequency damping after gain switching Set a damping of the vibration frequency for the vibration suppression control 1 for when the gain switching is enabled. This parameter will be enabled only when the following conditions are fulfilled. ・"Gain adjustment mode selection" in [Pr. PA08] is "Manual mode (_ _ _ 3)". ・"Vibration suppression control 1 tuning mode selection" in [Pr. PB02] is "Manual setting (_ _ _ 2)". ・"Gain switching selection" in [Pr. PB26] is "Control command from controller is enabled (_ _ _ 1)". Switching during driving may cause a shock. Always switch gain after the servo motor stops.	0.00	0.00 to 0.30
PB36	VRF14B	Vibration suppression control 1 - Resonance frequency damping after gain switching Set a damping of the resonance frequency for the vibration suppression control 1 for when the gain switching is enabled. This parameter will be enabled only when the following conditions are fulfilled. ・"Gain adjustment mode selection" in [Pr. PA08] is "Manual mode (_ _ _ 3)". ・"Vibration suppression control 1 tuning mode selection" in [Pr. PB02] is "Manual setting (_ _ _ 2)". ・"Gain switching selection" in [Pr. PB26] is "Control command from controller is enabled (_ _ _ 1)". Switching during driving may cause a shock. Always switch gain after the servo motor stops.	0.00	0.00 to 0.30

No.	Symbol	Name and function	Initial value [Unit]	Setting range
PB45	CNHF	Command notch filter Set the command notch filter.	Refer to the "Name and function" column.	

Setting digit	Explanation	Initial value
_ _ x x	Command notch filter setting frequency selection Refer to table 5.5 for the relation of setting values to frequency.	00h
_ x _ _	Notch depth selection Refer to table 5.6 for details.	0h
x _ _ _	For manufacturer setting	0h

Table 5.5 Command notch filter setting frequency selection

Setting value	Frequency [Hz]	Setting value	Frequency [Hz]	Setting value	Frequency [Hz]
00	Disabled	20	70	40	17.6
01	2250	21	66	41	16.5
02	1125	22	62	42	15.6
03	750	23	59	43	14.8
04	562	24	56	44	14.1
05	450	25	53	45	13.4
06	375	26	51	46	12.8
07	321	27	48	47	12.2
08	281	28	46	48	11.7
09	250	29	45	49	11.3
0A	225	2A	43	4A	10.8
0B	204	2B	41	4B	10.4
0C	187	2C	40	4C	10
0D	173	2D	38	4D	9.7
0E	160	2E	37	4E	9.4
0F	150	2F	36	4F	9.1
10	140	30	35.2	50	8.8
11	132	31	33.1	51	8.3
12	125	32	31.3	52	7.8
13	118	33	29.6	53	7.4
14	112	34	28.1	54	7.0
15	107	35	26.8	55	6.7
16	102	36	25.6	56	6.4
17	97	37	24.5	57	6.1
18	93	38	23.4	58	5.9
19	90	39	22.5	59	5.6
1A	86	3A	21.6	5A	5.4
1B	83	3B	20.8	5B	5.2
1C	80	3C	20.1	5C	5.0
1D	77	3D	19.4	5D	4.9
1E	75	3E	18.8	5E	4.7
1F	72	3F	18.2	5F	4.5

Table 5.6 Notch depth selection

Setting value	Depth [dB]	Setting value	Depth [dB]
0	-40.0	8	-6.0
1	-24.1	9	-5.0
2	-18.1	A	-4.1
3	-14.5	B	-3.3
4	-12.0	C	-2.5
5	-10.1	D	-1.8
6	-8.5	E	-1.2
7	-7.2	F	-0.6

<table>
<tr><th>No.</th><th>Symbol</th><th>Name and function</th><th>Initial value [unit]</th><th>Setting range</th></tr>
<tr><td>PB46</td><td>NH3</td><td>Machine resonance suppression filter 3
Set the notch frequency of the machine resonance suppression filter 3.
To enable the setting value, select "Enabled (_ _ _ 1)" of "Machine resonance suppression filter 3 selection" in [Pr. PB47].</td><td>4500
[Hz]</td><td>10 to
4500</td></tr>
<tr><td>PB47</td><td>NHQ3</td><td>Notch shape selection 3
Set forms of the machine resonance suppression filter 3.
<table>
<tr><th>Setting digit</th><th>Explanation</th><th>Initial value</th></tr>
<tr><td>_ _ _ x</td><td>Machine resonance suppression filter 3 selection
0: Disabled
1: Enabled</td><td>0h</td></tr>
<tr><td>_ _ x _</td><td>Notch depth selection
0: -40 dB
1: -14 dB
2: -8 dB
3: -4 dB</td><td>0h</td></tr>
<tr><td>_ x _ _</td><td>Notch width selection
0: α = 2
1: α = 3
2: α = 4
3: α = 5</td><td>0h</td></tr>
<tr><td>x _ _ _</td><td>For manufacturer setting</td><td>0h</td></tr>
</table></td><td colspan="2">Refer to the "Name and function" column.</td></tr>
<tr><td>PB48</td><td>NH4</td><td>Machine resonance suppression filter 4
Set the notch frequency of the machine resonance suppression filter 4.
To enable the setting value, select "Enabled (_ _ _ 1)" of "Machine resonance suppression filter 4 selection" in [Pr. PB49].</td><td>4500
[Hz]</td><td>10 to
4500</td></tr>
<tr><td>PB49</td><td>NHQ4</td><td>Notch shape selection 4
Set forms of the machine resonance suppression filter 4.
<table>
<tr><th>Setting digit</th><th>Explanation</th><th>Initial value</th></tr>
<tr><td>_ _ _ x</td><td>Machine resonance suppression filter 4 selection
0: Disabled
1: Enabled
When you select "Enabled" of this digit, [Pr. PB17 Shaft resonance suppression filter] cannot be used.</td><td>0h</td></tr>
<tr><td>_ _ x _</td><td>Notch depth selection
0: -40 dB
1: -14 dB
2: -8 dB
3: -4 dB</td><td>0h</td></tr>
<tr><td>_ x _ _</td><td>Notch width selection
0: α = 2
1: α = 3
2: α = 4
3: α = 5</td><td>0h</td></tr>
<tr><td>x _ _ _</td><td>For manufacturer setting</td><td>0h</td></tr>
</table></td><td colspan="2">Refer to the "Name and function" column.</td></tr>
<tr><td>PB50</td><td>NH5</td><td>Machine resonance suppression filter 5
Set the notch frequency of the machine resonance suppression filter 5.
To enable the setting value, select "Enabled (_ _ _ 1)" of "Machine resonance suppression filter 5 selection" in [Pr. PB51].</td><td>4500
[Hz]</td><td>10 to
4500</td></tr>
</table>

<table>
<tr><th>No.</th><th>Symbol</th><th>Name and function</th><th>Initial value [unit]</th><th>Setting range</th></tr>
<tr><td>PB51</td><td>NHQ5</td><td>Notch shape selection 5
Set forms of the machine resonance suppression filter 5.
When you select "Enabled (_ _ _ 1)" of "Robust filter selection" in [Pr. PE41], the machine resonance suppression filter 5 cannot be used.
<table>
<tr><th>Setting digit</th><th>Explanation</th><th>Initial value</th></tr>
<tr><td>_ _ _ x</td><td>Machine resonance suppression filter 5 selection
0: Disabled
1: Enabled</td><td>0h</td></tr>
<tr><td>_ _ x _</td><td>Notch depth selection
0: -40 dB
1: -14 dB
2: -8 dB
3: -4 dB</td><td>0h</td></tr>
<tr><td>_ x _ _</td><td>Notch width selection
0: α = 2
1: α = 3
2: α = 4
3: α = 5</td><td>0h</td></tr>
<tr><td>x _ _ _</td><td>For manufacturer setting</td><td>0h</td></tr>
</table></td><td colspan="2">Refer to the "Name and function" column.</td></tr>
<tr><td>PB52</td><td>VRF21</td><td>Vibration suppression control 2 - Vibration frequency
Set the vibration frequency for the vibration suppression control 2 to suppress low-frequency machine vibration.
To enable this setting, select "3 inertia mode (_ _ _ 1)" of "Vibration suppression mode selection" in [Pr. PA24].
When "Vibration suppression control 2 tuning mode selection" is "Automatic setting (_ _ 1 _)" in [Pr. PB02], this parameter will be set automatically. Set this parameter manually when "Manual setting (_ _ 2 _)" is selected.</td><td>100.0 [Hz]</td><td>0.1 to 300.0</td></tr>
<tr><td>PB53</td><td>VRF22</td><td>Vibration suppression control 2 - Resonance frequency
Set the resonance frequency for the vibration suppression control 2 to suppress low-frequency machine vibration.
To enable this setting, select "3 inertia mode (_ _ _ 1)" of "Vibration suppression mode selection" in [Pr. PA24].
When "Vibration suppression control 2 tuning mode selection" is "Automatic setting (_ _ 1 _)" in [Pr. PB02], this parameter will be set automatically. Set this parameter manually for "Manual setting (_ _ 2 _)".</td><td>100.0 [Hz]</td><td>0.1 to 300.0</td></tr>
<tr><td>PB54</td><td>VRF23</td><td>Vibration suppression control 2 - Vibration frequency damping
Set a damping of the vibration frequency for the vibration suppression control 2 to suppress low-frequency machine vibration.
To enable this setting, select "3 inertia mode (_ _ _ 1)" of "Vibration suppression mode selection" in [Pr. PA24].
When "Vibration suppression control 2 tuning mode selection" is "Automatic setting (_ _ 1 _)" in [Pr. PB02], this parameter will be set automatically. Set this parameter manually for "Manual setting (_ _ 2 _)".</td><td>0.00</td><td>0.00 to 0.30</td></tr>
<tr><td>PB55</td><td>VRF24</td><td>Vibration suppression control 2 - Resonance frequency damping
Set a damping of the resonance frequency for the vibration suppression control 2 to suppress low-frequency machine vibration.
To enable this setting, select "3 inertia mode (_ _ _ 1)" of "Vibration suppression mode selection" in [Pr. PA24].
When "Vibration suppression control 2 tuning mode selection" is "Automatic setting (_ _ 1 _)" in [Pr. PB02], this parameter will be set automatically. Set this parameter manually for "Manual setting (_ _ 2 _)".</td><td>0.00</td><td>0.00 to 0.30</td></tr>
</table>

No.	Symbol	Name and function	Initial value [unit]	Setting range
PB56	VRF21B	Vibration suppression control 2 - Vibration frequency after gain switching Set the vibration frequency for the vibration suppression control 2 for when the gain switching is enabled. To enable this setting, select "3 inertia mode (_ _ _ 1)" of "Vibration suppression mode selection" in [Pr. PA24]. This parameter will be enabled only when the following conditions are fulfilled. ・"Gain adjustment mode selection" in [Pr. PA08] is "Manual mode (_ _ _ 3)". ・"Vibration suppression control 2 tuning mode selection" in [Pr. PB02] is "Manual setting (_ _ 2 _)". ・"Gain switching selection" in [Pr. PB26] is "Control command from controller is enabled (_ _ _ 1)". Switching during driving may cause a shock. Always switch gain after the servo motor stops.	0.0 [Hz]	0.0 to 300.0
PB57	VRF22B	Vibration suppression control 2 - Resonance frequency after gain switching Set the resonance frequency for the vibration suppression control 2 for when the gain switching is enabled. To enable this setting, select "3 inertia mode (_ _ _ 1)" of "Vibration suppression mode selection" in [Pr. PA24]. This parameter will be enabled only when the following conditions are fulfilled. ・"Gain adjustment mode selection" in [Pr. PA08] is "Manual mode (_ _ _ 3)". ・"Vibration suppression control 2 tuning mode selection" in [Pr. PB02] is "Manual setting (_ _ 2 _)". ・"Gain switching selection" in [Pr. PB26] is "Control command from controller is enabled (_ _ _ 1)". Switching during driving may cause a shock. Always switch gain after the servo motor stops.	0.0 [Hz]	0.0 to 300.0
PB58	VRF23B	Vibration suppression control 2 - Vibration frequency damping after gain switching Set a damping of the vibration frequency for the vibration suppression control 2 for when the gain switching is enabled. To enable this setting, select "3 inertia mode (_ _ _ 1)" of "Vibration suppression mode selection" in [Pr. PA24]. This parameter will be enabled only when the following conditions are fulfilled. ・"Gain adjustment mode selection" in [Pr. PA08] is "Manual mode (_ _ _ 3)". ・"Vibration suppression control 2 tuning mode selection" in [Pr. PB02] is "Manual setting (_ _ 2 _)". ・"Gain switching selection" in [Pr. PB26] is "Control command from controller is enabled (_ _ _ 1)". Switching during driving may cause a shock. Always switch gain after the servo motor stops.	0.00	0.00 to 0.30
PB59	VRF24B	Vibration suppression control 2 - Resonance frequency damping after gain switching Set a damping of the resonance frequency for the vibration suppression control 2 for when the gain switching is enabled. To enable this setting, select "3 inertia mode (_ _ _ 1)" of "Vibration suppression mode selection" in [Pr. PA24]. This parameter will be enabled only when the following conditions are fulfilled. ・"Gain adjustment mode selection" in [Pr. PA08] is "Manual mode (_ _ _ 3)". ・"Vibration suppression control 2 tuning mode selection" in [Pr. PB02] is "Manual setting (_ _ 2 _)". ・"Gain switching selection" in [Pr. PB26] is "Control command from controller is enabled (_ _ _ 1)". Switching during driving may cause a shock. Always switch gain after the servo motor stops.	0.00	0.00 to 0.30
PB60	PG1B	Model loop gain after gain switching Set the model loop gain for when the gain switching is enabled. When you set a value smaller than 1.0 rad/s, the value will be the same as the value set in [Pr. PB07]. This parameter will be enabled only when the following conditions are fulfilled. ・"Gain adjustment mode selection" in [Pr. PA08] is "Manual mode (_ _ _ 3)". ・"Gain switching selection" in [Pr. PB26] is "Control command from controller is enabled (_ _ _ 1)". Switching during driving may cause a shock. Always switch gain after the servo motor stops.	0.0 [rad/s]	0.0 to 2000.0

5.2.3 Extension setting parameters ([Pr. PC_ _])

<table>
<tr><th>No.</th><th>Symbol</th><th>Name and function</th><th>Initial value [unit]</th><th>Setting range</th></tr>
<tr><td>PC01</td><td>ERZ</td><td>Error excessive alarm level
Set an error excessive alarm level.
Set the level in rev unit. Setting "0" will apply 3 rev. Setting over 200 rev will be clamped with 200 rev.

Note. The setting unit can be changed in [Pr. PC06].</td><td>0 [rev]
(Note)</td><td>0 to 1000</td></tr>
<tr><td>PC02</td><td>MBR</td><td>Electromagnetic brake sequence output
Set the delay time from when MBR (Electromagnetic brake interlock) turns off till when the base drive circuit is shut-off.</td><td>0
[ms]</td><td>0 to 1000</td></tr>
<tr><td>PC04</td><td>**COP1</td><td>Function selection C-1
Select an encoder cable communication method.
<table>
<tr><th>Setting digit</th><th>Explanation</th><th>Initial value</th></tr>
<tr><td>_ _ _ x</td><td rowspan="3">For manufacturer setting</td><td>0h</td></tr>
<tr><td>_ _ x _</td><td>2h</td></tr>
<tr><td>_ x _ _</td><td>0h</td></tr>
<tr><td>x _ _ _</td><td>Encoder cable communication method selection
0: Two-wire type
1: Four-wire type
Incorrect setting will result in [AL. 16 Encoder initial communication error 1]. Or [AL. 20 Encoder normal communication error 1] will occur.</td><td>0h</td></tr>
</table></td><td colspan="2">Refer to the "Name and function" column.</td></tr>
<tr><td>PC05</td><td>**COP2</td><td>Function selection C-2
Set the motor-less operation, test operation, and [AL. 9B Error excessive warning].
<table>
<tr><th>Setting digit</th><th>Explanation</th><th>Initial value</th></tr>
<tr><td>_ _ _ x</td><td>Motor-less operation selection
0: Disabled
1: Enabled</td><td>0h</td></tr>
<tr><td>_ _ x _</td><td>Test operation selection
0: Disabled
1: Enabled</td><td>0h</td></tr>
<tr><td>_ x _ _</td><td>For manufacturer setting</td><td>0h</td></tr>
<tr><td>x _ _ _</td><td>[AL. 9B Error excessive warning] selection
0: [AL. 9B Error excessive warning] is disabled.
1: [AL. 9B Error excessive warning] is enabled.</td><td>0h</td></tr>
</table></td><td colspan="2">Refer to the "Name and function" column.</td></tr>
<tr><td>PC06</td><td>*COP3</td><td>Function selection C-3
Select units for the error excessive alarm level setting with [Pr. PC01] and for the error excessive warning level setting with [Pr. PC38]. This parameter cannot be used in the speed control mode and torque control mode.
<table>
<tr><th>Setting digit</th><th>Explanation</th><th>Initial value</th></tr>
<tr><td>_ _ _ x</td><td rowspan="3">For manufacturer setting</td><td>0h</td></tr>
<tr><td>_ _ x _</td><td>0h</td></tr>
<tr><td>_ x _ _</td><td>0h</td></tr>
<tr><td>x _ _ _</td><td>Error excessive alarm/error excessive warning level unit selection
0: 1 rev unit
1: 0.1 rev unit
2: 0.01 rev unit
3: 0.001 rev unit</td><td>0h</td></tr>
</table></td><td colspan="2">Refer to the "Name and function" column.</td></tr>
</table>

<table>
<tr><th>No.</th><th>Symbol</th><th>Name and function</th><th>Initial value [unit]</th><th>Setting range</th></tr>
<tr><td>PC07</td><td>ZSP</td><td>Zero speed
Set an output range of ZSP (Zero speed detection).
ZSP (Zero speed detection) has hysteresis of 20 r/min.</td><td>50
[r/min]</td><td>0
to
10000</td></tr>
<tr><td>PC08</td><td>OSL</td><td>Overspeed alarm detection level
Set an overspeed alarm detection level.
When you set a value exceeding "servo motor maximum speed × 120%", the set value will be clamped.
When you set "0", the value of "servo motor maximum speed × 120%" will be set.</td><td>0
[r/min]</td><td>0
to
20000</td></tr>
<tr><td>PC17</td><td>**COP4</td><td>Function selection C-4
This is used to select a home position setting condition.
<table>
<tr><th>Setting digit</th><th>Explanation</th><th>Initial value</th></tr>
<tr><td>_ _ _ x</td><td>Selection of home position setting condition
0: Need to pass servo motor Z-phase after power on
1: Not need to pass servo motor Z-phase after power on</td><td>0h</td></tr>
<tr><td>_ _ x _</td><td rowspan="3">For manufacturer setting</td><td>0h</td></tr>
<tr><td>_ x _ _</td><td>0h</td></tr>
<tr><td>x _ _ _</td><td>0h</td></tr>
</table></td><td colspan="2">Refer to the "Name and function" column.</td></tr>
<tr><td>PC18</td><td>*COP5</td><td>Function selection C-5
Select a condition of [AL. E9.1 Servo-on signal on during main circuit off].
<table>
<tr><th>Setting digit</th><th>Explanation</th><th>Initial value</th></tr>
<tr><td>_ _ _ x</td><td rowspan="3">For manufacturer setting</td><td>0h</td></tr>
<tr><td>_ _ x _</td><td>0h</td></tr>
<tr><td>_ x _ _</td><td>0h</td></tr>
<tr><td>x _ _ _</td><td>[AL. E9.1 Servo-on signal on during main circuit off] selection
0: Detection with ready-on and servo-on command
1: Detection with servo-on command</td><td>0h</td></tr>
</table></td><td colspan="2">Refer to the "Name and function" column.</td></tr>
<tr><td>PC20</td><td>*COP7</td><td>Function selection C-7
Select a detection method of [AL. 10.2 Bus voltage drop].
<table>
<tr><th>Setting digit</th><th>Explanation</th><th>Initial value</th></tr>
<tr><td>_ _ _ x</td><td rowspan="2">For manufacturer setting</td><td>0h</td></tr>
<tr><td>_ _ x _</td><td>0h</td></tr>
<tr><td>_ x _ _</td><td>Undervoltage alarm selection
Select the alarm and warning that occurs when the bus voltage drops to the undervoltage alarm level.
0: [AL. 10.2] occurs regardless of the servo motor speed.
1: [AL. E9.1] occurs when the servo motor speed is 50 r/min or less, and [AL. 10.2] occurs when the servo motor speed is over 50 r/min.</td><td>0h</td></tr>
<tr><td>x _ _ _</td><td>For manufacturer setting</td><td>0h</td></tr>
</table></td><td colspan="2">Refer to the "Name and function" column.</td></tr>
<tr><td>PC21</td><td>*BPS</td><td>Alarm history clear
Clear the alarm history.
<table>
<tr><th>Setting digit</th><th>Explanation</th><th>Initial value</th></tr>
<tr><td>_ _ _ x</td><td>Alarm history clear selection
0: Disabled
1: Enabled
When you select "Enabled", the alarm history will be cleared at next power-on. After the alarm history is cleared, the setting is automatically disabled.</td><td>0h</td></tr>
<tr><td>_ _ x _</td><td rowspan="3">For manufacturer setting</td><td>0h</td></tr>
<tr><td>_ x _ _</td><td>0h</td></tr>
<tr><td>x _ _ _</td><td>0h</td></tr>
</table></td><td colspan="2">Refer to the "Name and function" column.</td></tr>
</table>

<table>
<tr><th>No.</th><th>Symbol</th><th>Name and function</th><th>Initial value [unit]</th><th>Setting range</th></tr>
<tr><td>PC24</td><td>RSBR</td><td>Forced stop deceleration time constant
Set a deceleration time constant for the forced stop deceleration function.
Set the time taken from the rated speed to 0 r/min in ms unit.
 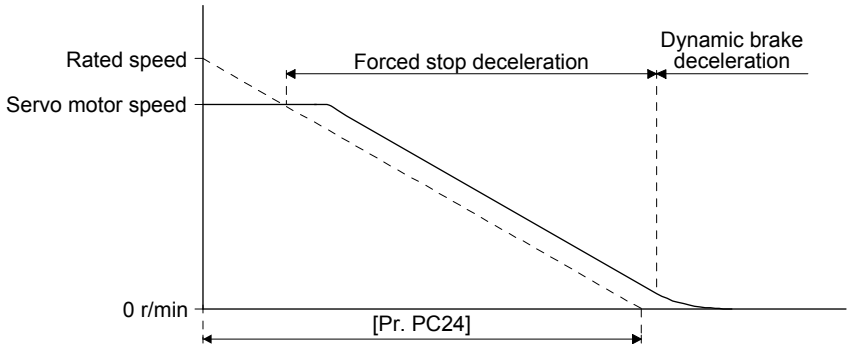

[Precautions]
・If the servo motor torque is saturated at the maximum torque during forced stop deceleration because the set time is too short, the time to stop will be longer than the set time constant.
・[AL. 50 Overload 1] or [AL. 51 Overload 2] may occur during forced stop deceleration, depending on the set value.
・After an alarm that leads to a forced stop deceleration has occurred, if an alarm that does not lead to a forced stop deceleration occurs or the power supply is cut, dynamic braking will start regardless of the deceleration time constant setting.
・Set a longer time than deceleration time at quick stop of the controller. If a shorter time is set, [AL. 52 Error excessive] may occur.</td><td>100
[ms]</td><td>0 to
20000</td></tr>
<tr><td>PC29</td><td>*COPB</td><td>Function selection C-B
Select the POL reflection at torque control.
<table>
<tr><th>Setting digit</th><th>Explanation</th><th>Initial value</th></tr>
<tr><td>_ _ _ x</td><td rowspan="3">For manufacturer setting</td><td>0h</td></tr>
<tr><td>_ _ x _</td><td>0h</td></tr>
<tr><td>_ x _ _</td><td>0h</td></tr>
<tr><td>x _ _ _</td><td>POL reflection selection at torque control
0: Enabled
1: Disabled</td><td>0h</td></tr>
</table></td><td colspan="2">Refer to the "Name and function" column.</td></tr>
<tr><td>PC31</td><td>RSUP1</td><td>Vertical axis freefall prevention compensation amount
Set the compensation amount of the vertical axis freefall prevention function.
Set the amount in units of the servo motor rotation amount.
When a positive value is set, compensation is performed to the address increasing direction.
When a negative value is set, compensation is performed to the address decreasing direction.
The vertical axis freefall prevention function is performed when all of the following conditions are met.
1) Position control mode
2) The value of the parameter is other than "0".
3) The forced stop deceleration function is enabled.
4) An alarm occurs or EM2 turns off when the servo motor speed is zero speed or less.
5) MBR (Electromagnetic brake interlock) was enabled in [Pr. PD07], and the base circuit shut-off delay time was set in [Pr. PC02].</td><td>0
[0.0001 rev]</td><td>-25000
to
25000</td></tr>
</table>

No.	Symbol	Name and function	Initial value [unit]	Setting range
PC38	ERW	Error excessive warning level Set an error excessive warning level. To enable the parameter, select "Enabled (1 _ _ _)" of "[AL. 9B Error excessive warning] selection" in [Pr. PC05]. You can change the setting unit with "Error excessive alarm/error excessive warning level unit selection" in [Pr. PC06]. Set the level in rev unit. Setting "0" will apply 1 rev. Setting over 200 rev will be clamped with 200 rev. When an error reaches the set value, [AL. 9B Error excessive warning] will occur. When the error decreases and becomes lower than the set value, the warning will be canceled automatically. The minimum pulse width of the warning signal is 100 [ms]. Set values to satisfy the following condition: [Pr. PC38 Error excessive warning level] < [Pr. PC01 Error excessive alarm level] [AL. 52 Error excessive] will occur first when you set as follows: [Pr. PC38 Error excessive warning level] ≥ [Pr. PC01 Error excessive alarm level]	0 [rev]	0 to 1000

5.2.4 I/O setting parameters ([Pr. PD_ _])

No.	Symbol	Name and function	Initial value [unit]	Setting range
PD07	*DO1	Output device selection 1 You can assign any output device to the CN3-13 pin. Setting digit / Explanation / Initial value _ _ x x: Device selection. Refer to table 5.7 for settings. — 05h _ x _ _: For manufacturer setting — 0h x _ _ _: For manufacturer setting — 0h Table 5.7 Selectable output devices	Refer to the "Name and function" column.	

Setting digit	Explanation	Initial value
_ _ x x	Device selection Refer to table 5.7 for settings.	05h
_ x _ _	For manufacturer setting	0h
x _ _ _		0h

Table 5.7 Selectable output devices

Setting value	Output device
00	Always off
02	RD (Ready)
03	ALM (Malfunction)
04	INP (In-position)
05	MBR (Electromagnetic brake interlock)
07	TLC (Limiting torque)
08	WNG (Warning)
09	BWNG (Battery warning)
0A	SA (Speed reached)
0C	ZSP (Zero speed detection)
0F	CDPS (Variable gain selection)
11	ABSV (Absolute position undetermined)
17	MTTR (During tough drive)

<table>
<tr><th>No.</th><th>Symbol</th><th>Name and function</th><th>Initial value [unit]</th><th>Setting range</th></tr>
<tr><td>PD11</td><td>*DIF</td><td>Input filter setting
Select the input filter.
<table>
<tr><th>Setting digit</th><th>Explanation</th><th>Initial value</th></tr>
<tr><td>_ _ _ x</td><td>Input signal filter selection
Refer to the servo system controller instruction manual for the setting.
If an external input signal causes chattering due to noise, etc., use the input filter to suppress it.
0: None
1: 0.888 [ms]
2: 1.777 [ms]
3: 2.666 [ms]
4: 3.555 [ms]</td><td>4h</td></tr>
<tr><td>_ _ x _</td><td rowspan="3">For manufacturer setting</td><td>0h</td></tr>
<tr><td>_ x _ _</td><td>0h</td></tr>
<tr><td>x _ _ _</td><td>0h</td></tr>
</table></td><td colspan="2">Refer to the "Name and function" column.</td></tr>
<tr><td>PD13</td><td>*DOP2</td><td>Function selection D-2
Select a condition to turn on INP (In-position).
<table>
<tr><th>Setting digit</th><th>Explanation</th><th>Initial value</th></tr>
<tr><td>_ _ _ x</td><td rowspan="2">For manufacturer setting</td><td>0h</td></tr>
<tr><td>_ _ x _</td><td>0h</td></tr>
<tr><td>_ x _ _</td><td>INP (In-position) ON condition selection
Select a condition to turn on INP (In-position).
0: Within the in-position range
1: Within the in-position range and a command has been issued
When a command is not input for 1.33 ms, the command is considered to have been issued.</td><td>0h</td></tr>
<tr><td>x _ _ _</td><td>For manufacturer setting</td><td>0h</td></tr>
</table></td><td colspan="2">Refer to the "Name and function" column.</td></tr>
</table>

No.	Symbol	Name and function	Initial value [unit]	Setting range
PD14	*DOP3	Function selection D-3	Refer to the "Name and function" column.	

Setting digit	Explanation	Initial value
_ _ _ x	For manufacturer setting	0h
_ _ x _	Selection of output device at warning occurrence Select the WNG (Warning) and ALM (Malfunction) output status at warning occurrence. Servo amplifier output	0h
_ x _ _	For manufacturer setting	0h
x _ _ _		0h

Setting value	(Note 1) Device status
0	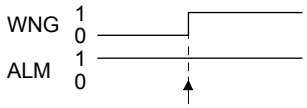 Warning occurrence
1	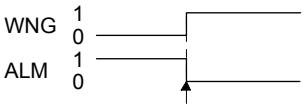 Warning occurrence (Note 2)

Note 1. 0: Off
1: On
2. Although ALM is turned off upon occurrence of the warning, the forced stop deceleration is performed.

5.2.5 Extension setting 2 parameters ([Pr. PE_ _])

<table>
<tr><th>No.</th><th>Symbol</th><th>Name and function</th><th>Initial value [unit]</th><th>Setting range</th></tr>
<tr><td>PE41</td><td>EOP3</td><td>Function selection E-3
<table>
<tr><th>Setting digit</th><th>Explanation</th><th>Initial value</th></tr>
<tr><td>_ _ _ x</td><td>Robust filter selection
0: Disabled
1: Enabled
When you select "Enabled" of this digit, the machine resonance suppression filter 5 set in [Pr. PB51] cannot be used.</td><td>0h</td></tr>
<tr><td>_ _ x _</td><td rowspan="3">For manufacturer setting</td><td>0h</td></tr>
<tr><td>_ x _ _</td><td>0h</td></tr>
<tr><td>x _ _ _</td><td>0h</td></tr>
</table></td><td colspan="2">Refer to the "Name and function" column.</td></tr>
<tr><td>PE44</td><td>LMCP</td><td>Lost motion compensation positive-side compensation value selection
Set the lost motion compensation amount for when the reverse rotation (CW) switches to forward rotation (CCW) in 0.01% unit while considering the rated torque as 100%.</td><td>0
[0.01%]</td><td>0 to 30000</td></tr>
<tr><td>PE45</td><td>LMCN</td><td>Lost motion compensation negative-side compensation value selection
Set the lost motion compensation amount for when the forward rotation (CCW) switches to reverse rotation (CW) in 0.01% unit while considering the rated torque as 100%.</td><td>0
[0.01%]</td><td>0 to 30000</td></tr>
<tr><td>PE46</td><td>LMFLT</td><td>Lost motion filter setting
Set the time constant of the lost motion compensation filter in units of 0.1 ms.
When 0 is set, values set in [Pr. PE44] and [Pr. PE45] are used for compensation. When a value other than 0 is set, the high-pass filter output value of the set time constant is used for compensation and the lost motion compensation amount is held.</td><td>0
[0.1ms]</td><td>0 to 30000</td></tr>
<tr><td>PE47</td><td>TOF</td><td>Torque offset
Set this parameter to cancel unbalanced torque of the vertical axis. Set this parameter considering the rated torque of the servo motor as 100%.
The torque offset does not need to be set for a machine not generating unbalanced torque.
The torque offset set with this parameter will be enabled in the position control mode, speed control mode, and torque control mode. Input commands considering the torque offset in the torque control mode.</td><td>0
[0.01%]</td><td>-10000 to 10000</td></tr>
<tr><td>PE48</td><td>*LMOP</td><td>Lost motion compensation function selection
Select the lost motion compensation function.
<table>
<tr><th>Setting value</th><th>Explanation</th><th>Initial value</th></tr>
<tr><td>_ _ _ x</td><td>Lost motion compensation selection
0: Lost motion compensation is disabled.
1: Lost motion compensation is enabled.</td><td>0h</td></tr>
<tr><td>_ _ x _</td><td>Lost motion compensation non-sensitive band unit setting
0: 1 pulse unit
1: 1 kplulse unit</td><td>0h</td></tr>
<tr><td>_ x _ _</td><td rowspan="2">For manufacturer setting</td><td>0h</td></tr>
<tr><td>x _ _ _</td><td>0h</td></tr>
</table></td><td colspan="2">Refer to the "Name and function" column.</td></tr>
<tr><td>PE49</td><td>LMCD</td><td>Lost motion compensation timing
Set the lost motion compensation timing in units of 0.1 ms.
Timing to compensate the lost motion can be delayed by the set time.</td><td>0
[0.1ms]</td><td>0 to 30000</td></tr>
<tr><td>PE50</td><td>LMCT</td><td>Lost motion compensation non-sensitive band
Set the lost motion compensation non-sensitive band. When the model position droop is the setting value or smaller, the speed becomes 0. The setting unit can be changed in [Pr. PE48]. Set this parameter per encoder.</td><td>0
[pulse]/
[kpulse]</td><td>0 to 65535</td></tr>
</table>

5.2.6 Extension setting 3 parameters ([Pr. PF_ _])

<table>
<tr><th>No.</th><th>Symbol</th><th>Name and function</th><th>Initial value [unit]</th><th>Setting range</th></tr>
<tr><td>PF06</td><td>*FOP5</td><td>Function selection F-5
<table>
<tr><th>Setting digit</th><th>Explanation</th><th>Initial value</th></tr>
<tr><td>_ _ _ x</td><td>Electronic dynamic brake selection
0: Disabled
3: Automatic (enabled only for specified servo motors)
Refer to the following table for the specified servo motors.
<table>
<tr><th>Series</th><th>Servo motor</th></tr>
<tr><td>HG-KN</td><td>HG-KN053/HG-KN13/HG-KN23/HG-KN43</td></tr>
<tr><td>HG-SN</td><td>HG-SN52</td></tr>
</table></td><td>3h</td></tr>
<tr><td>_ _ x _</td><td rowspan="3">For manufacturer setting</td><td>0h</td></tr>
<tr><td>_ x _ _</td><td>0h</td></tr>
<tr><td>x _ _ _</td><td>0h</td></tr>
</table></td><td colspan="2">Refer to the "Name and function" column.</td></tr>
<tr><td>PF12</td><td>DBT</td><td>Electronic dynamic brake operating time
Set an operating time for the electronic dynamic brake.</td><td>2000
[ms]</td><td>0 to 10000</td></tr>
<tr><td>PF21</td><td>DRT</td><td>Drive recorder switching time setting
Set the drive recorder switching time.
When USB communication is cut during the use of a graph function, the function will be changed to the drive recorder function after the time set in this parameter has passed.
When a value from "1" to "32767" is set, the function will be switched to the drive recorder function after the set time.
However, when "0" is set, the function will be switched to the drive recorder function after 600 s.
When "-1" is set, the drive recorder function is disabled.</td><td>0
[s]</td><td>-1 to 32767</td></tr>
<tr><td>PF23</td><td>OSCL1</td><td>Vibration tough drive - Oscillation detection level
Set filter readjustment sensitivity levels of [Pr. PB13 Machine resonance suppression filter 1] and [Pr. PB15 Machine resonance suppression filter 2] while the vibration tough drive is enabled.
However, setting "0" will be 50%.
Example: When you set "50" in the parameter, the filter will be readjusted at the time of 50% or higher oscillation level.</td><td>50
[%]</td><td>0 to 100</td></tr>
<tr><td>PF24</td><td>*OSCL2</td><td>Vibration tough drive function selection
<table>
<tr><th>Setting digit</th><th>Explanation</th><th>Initial value</th></tr>
<tr><td>_ _ _ x</td><td>Oscillation detection alarm selection
0: [AL. 54 Oscillation detection] will occur at oscillation detection.
1: [AL. F3.1 Oscillation detection warning] will occur at oscillation detection.
2: Oscillation detection function is disabled.
Select whether to generate an alarm or a warning when an oscillation continues at a filter readjustment sensitivity level of [Pr. PF23].
The digit is continuously enabled regardless of the vibration tough drive in [Pr. PA20].</td><td>0h</td></tr>
<tr><td>_ _ x _</td><td rowspan="3">For manufacturer setting</td><td>0h</td></tr>
<tr><td>_ x _ _</td><td>0h</td></tr>
<tr><td>x _ _ _</td><td>0h</td></tr>
</table></td><td colspan="2">Refer to the "Name and function" column.</td></tr>
</table>

No.	Symbol	Name and function	Initial value [unit]	Setting range
PF25	CVAT	Instantaneous power failure tough drive - Detection time Set the time until the occurrence of [AL. 10.1 Voltage drop in the power]. To disable the parameter, select "Disabled (_ 0 _ _)" of "instantaneous power failure tough drive selection" in [Pr. PA20]. When "Enabled (_ 1 _ _)" of "instantaneous power failure tough drive selection" is selected in [Pr. PA20], the power should be off for the setting value of this parameter +1 s or longer before the power is cycled to enable a parameter whose symbol is preceded by "*" or "**".	200 [ms]	30 to 2000
PF31	FRIC	Machine diagnosis function - Friction judgement speed Set a servo motor speed to divide a friction estimation area into high and low for the friction estimation process of the machine diagnosis. However, when "0" is set, the value will be half of the rated speed. When your operation pattern is under the rated speed, we recommend that you set half value of the maximum speed with this. 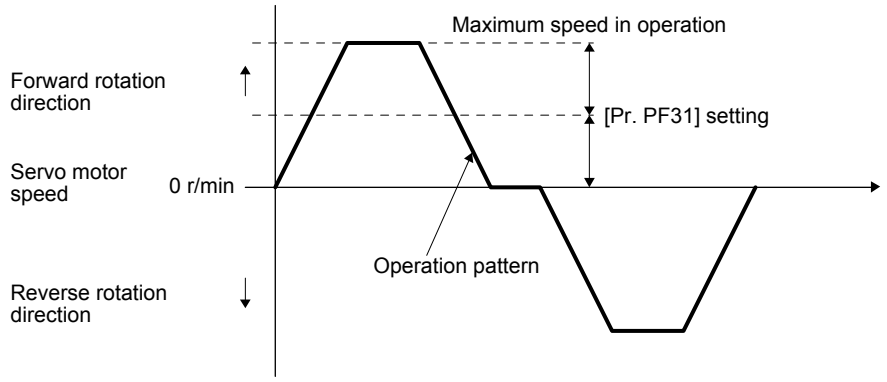 	0 [r/min]	0 to permissible speed

6. NORMAL GAIN ADJUSTMENT

POINT

- In the torque control mode, you do not need to make gain adjustment.
- Before making gain adjustment, check that your machine is not being operated at maximum torque of the servo motor. If operated over maximum torque, the machine may vibrate and may operate unexpectedly. In addition, make gain adjustment with a safety margin considering characteristic differences of each machine. It is recommended that generated torque during operation be under 90% of the maximum torque of the servo motor.

6.1 Different adjustment methods

6.1.1 Adjustment on a single servo amplifier

The following table shows the gain adjustment modes that can be set on a single servo amplifier. For gain adjustment, first execute "Auto tuning mode 1". If you are not satisfied with the result of the adjustment, execute "Auto tuning mode 2" and "Manual mode" in this order.

(1) Gain adjustment mode explanation

Gain adjustment mode	[Pr. PA08] setting	Estimation of load to motor inertia ratio	Automatically set parameters	Manually set parameters
Auto tuning mode 1 (initial value)	_ _ _ 1	Always estimated	GD2 ([Pr. PB06]) PG1 ([Pr. PB07]) PG2 ([Pr. PB08]) VG2 ([Pr. PB09]) VIC ([Pr. PB10])	RSP ([Pr. PA09])
Auto tuning mode 2	_ _ _ 2	Fixed to [Pr. PB06] value	PG1 ([Pr. PB07]) PG2 ([Pr. PB08]) VG2 ([Pr. PB09]) VIC ([Pr. PB10])	GD2 ([Pr. PB06]) RSP ([Pr. PA09])
Manual mode	_ _ _ 3			GD2 ([Pr. PB06]) PG1 ([Pr. PB07]) PG2 ([Pr. PB08]) VG2 ([Pr. PB09]) VIC ([Pr. PB10])
2 gain adjustment mode 1 (interpolation mode)	_ _ _ 0	Always estimated	GD2 ([Pr. PB06]) PG2 ([Pr. PB08]) VG2 ([Pr. PB09]) VIC ([Pr. PB10])	PG1 ([Pr. PB07]) RSP ([Pr. PA09])
2 gain adjustment mode 2	_ _ _ 4	Fixed to [Pr. PB06] value	PG2 ([Pr. PB08]) VG2 ([Pr. PB09]) VIC ([Pr. PB10])	GD2 ([Pr. PB06]) PG1 ([Pr. PB07]) RSP ([Pr. PA09])

(2) Adjustment sequence and mode usage

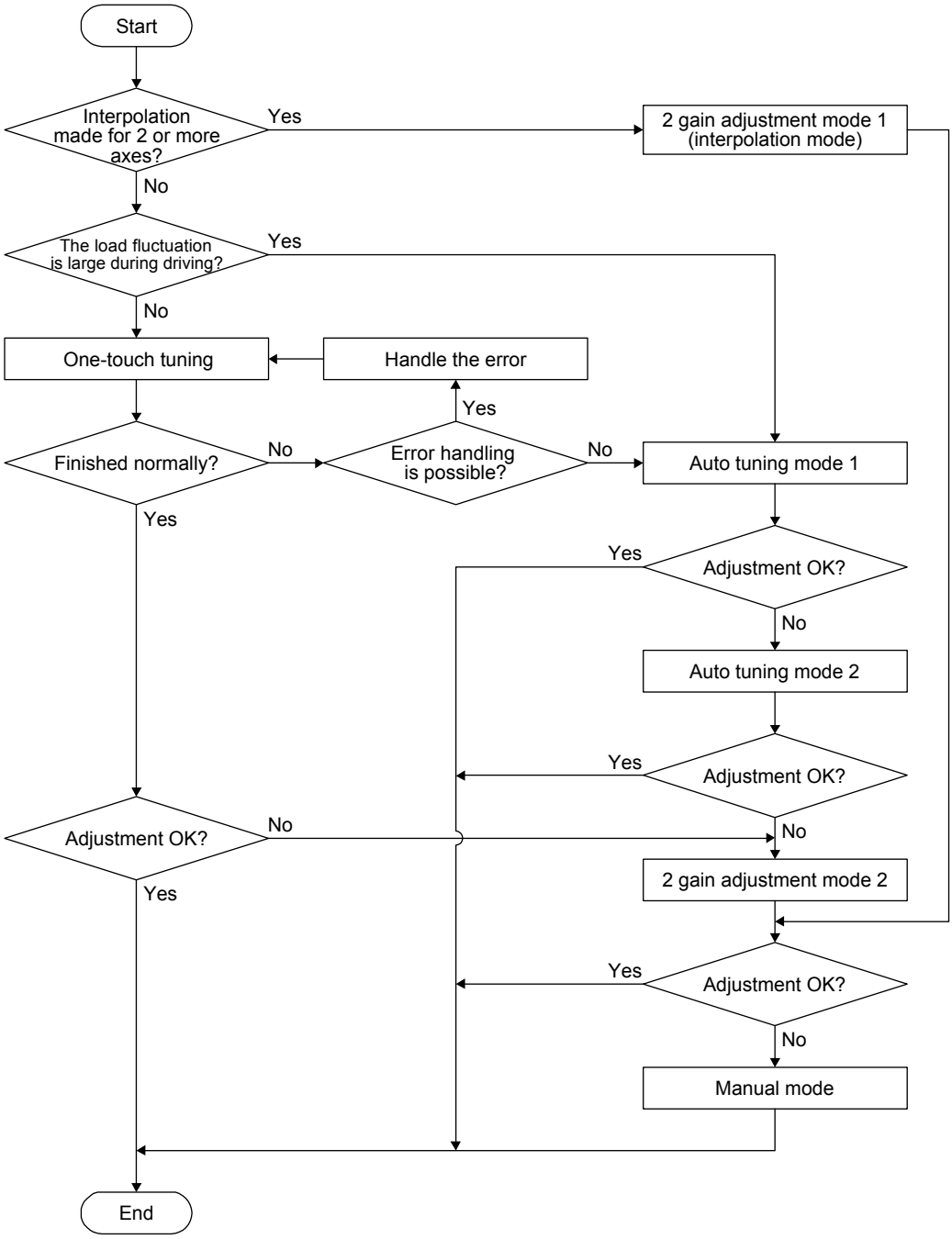

6.1.2 Adjustment using MR Configurator2

This section explains the functions and adjustment using the servo amplifier with MR Configurator2.

Function	Description	Adjustment
Machine analyzer	With the machine and servo motor coupled, the characteristic of the mechanical system can be measured by giving a random vibration command from a personal computer to the servo and measuring the machine response.	You can grasp the machine resonance frequency and determine the notch frequency of the machine resonance suppression filter.

6.2 One-touch tuning

POINT
●When executing the one-touch tuning, check the [Pr. PA21 One-touch tuning function selection] is "_ _ _ 1" (initial value).

After connecting MR Configurator2 and opening the one-touch tuning window, you can use the function. The following parameters are set automatically with one-touch tuning.

Table 6.1 List of parameters automatically set with one-touch tuning

Parameter	Symbol	Name
PA08	ATU	Auto tuning mode
PA09	RSP	Auto tuning response
PB01	FILT	Adaptive tuning mode (adaptive filter II)
PB02	VRFT	Vibration suppression control tuning mode (advanced vibration suppression control II)
PB06	GD2	Load to motor inertia ratio
PB07	PG1	Model loop gain
PB08	PG2	Position loop gain
PB09	VG2	Speed loop gain
PB10	VIC	Speed integral compensation
PB12	OVA	Overshoot amount compensation
PB13	NH1	Machine resonance suppression filter 1
PB14	NHQ1	Notch shape selection 1

Parameter	Symbol	Name
PB15	NH2	Machine resonance suppression filter 2
PB16	NHQ2	Notch shape selection 2
PB18	LPF	Low-pass filter setting
PB19	VRF11	Vibration suppression control 1 - Vibration frequency
PB20	VRF12	Vibration suppression control 1 - Resonance frequency
PB21	VRF13	Vibration suppression control 1 - Vibration frequency damping
PB22	VRF14	Vibration suppression control 1 - Resonance frequency damping
PB23	VFBF	Low-pass filter selection
PB47	NHQ3	Notch shape selection 3
PB48	NH4	Machine resonance suppression filter 4
PB49	NHQ4	Notch shape selection 4
PB51	NHQ5	Notch shape selection 5
PE41	EOP3	Function selection E-3

6.2.1 One-touch tuning flowchart

Make one-touch tuning as follows.

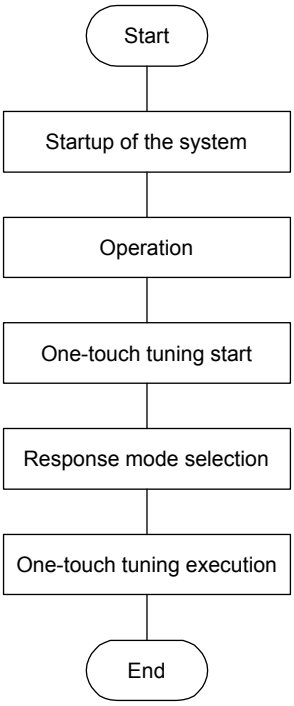

Start a system referring to chapter 4.

Rotate the servo motor by an external controller, etc. (The one-touch tuning cannot be performed if the servo motor is not operating.)

Start one-touch tuning of MR Configurator2.

Select a response mode (high mode, basic mode, and low mode) in the one-touch tuning window of MR Configurator2.

Push the start button to start one-touch tuning. Push it during servo motor driving.
When one-touch tuning is completed normally, the parameters described in table 6.1 will be set automatically.

6.2.2 Display transition and operation procedure of one-touch tuning

(1) Response mode selection

Select a response mode from 3 modes in the one-touch tuning window of MR Configurator2.

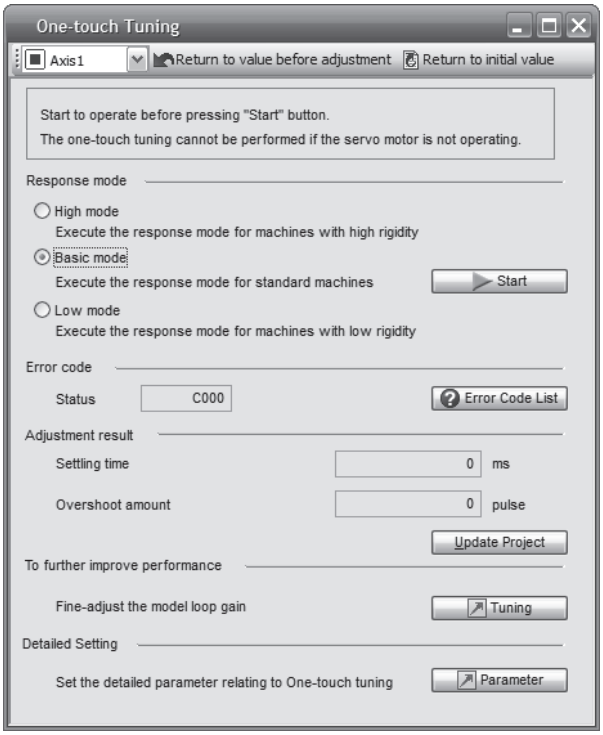

Response mode	Explanation
High mode	This mode is for a high rigid system.
Basic mode	This mode is for a standard system.
Low mode	This mode is for a low rigid system.

Refer to the following table to select a response mode.

Response mode			Response	Machine characteristic
Low mode	Basic mode	High mode		Guideline of applicable machines
↕	↕	↕	Low response ↕ High response	Arm robot General machine tool conveyor Precision working machine Inserter Mounter Bonder

(2) One-touch tuning execution

POINT
●For equipment in which overshoot during one-touch tuning is in the permissible level of the in-position range, changing the value of [Pr. PA25 One-touch tuning - Overshoot permissible level] will shorten the settling time and improve the response.

After the response mode is selected in (1), pushing the start button during servo motor driving will start one-touch tuning. If the start button is pushed while the servo motor stops, "C 0 0 2" or "C 0 0 4" will be displayed at status in an error code. (Refer to (4) in this section for error codes.)

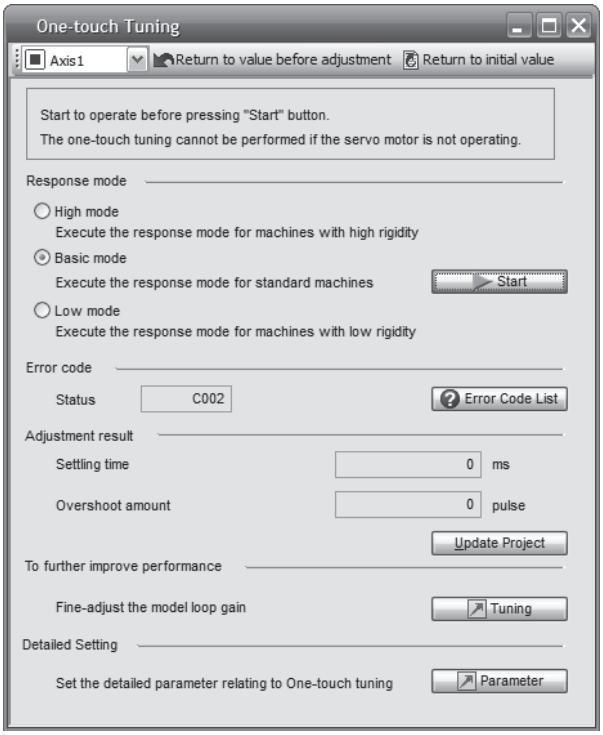

During processing of one-touch tuning, the status will be displayed in the progress window as follows. One-touch tuning will be finished at 100%.

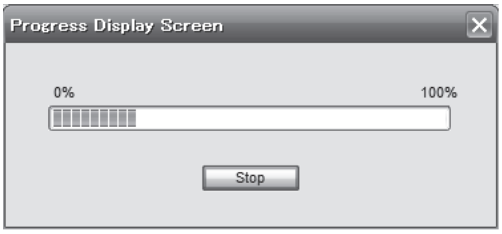

Completing the one-touch tuning starts writing tuning parameters to the servo amplifier. The status in an error code displays "0 0 0 0". In addition, settling time and overshoot amount will be displayed in "Adjustment result" after adjustment.

(3) Stop of one-touch tuning

During one-touch tuning, pushing the stop button stops one-touch tuning.

If the one-touch tuning is stopped, "C 0 0 0" will be displayed at status in an error code.

(4) If an error occurs

If a tuning error occurs during one-touch tuning, the tuning will be forcibly terminated. With that, the following error code will be displayed in status. Check the cause of the tuning error.

Error code	Name	Description	Action
C000	Tuning canceled	The stop button was pushed during one-touch tuning.	
C001	Overshoot exceeded	The overshoot amount is larger than the value set in [Pr. PA10 In-position range].	Increase the in-position range.
C002	Servo-off during tuning	The one-touch tuning was attempted during servo-off.	Perform the one-touch tuning after servo-on.
C003	Control mode error	The one-touch tuning was attempted while the torque control mode was selected as the control mode.	Select the position control mode or speed control mode for the control mode from the controller, and then make one-touch tuning.
C004	Time-out	1. One cycle time during the operation has been over 30 s.	Set the one cycle time during the operation to 30 s or shorter.
		2. The command speed is low.	Set the servo motor speed to 100 r/min or faster.
		3. The operation interval of the continuous operation is short.	Maintain the operation interval during motor driving about 200 ms.
C005	Load to motor inertia ratio misestimated	1. Estimating the load to motor inertia ratio at one-touch tuning failed.	Drive the motor so that the following conditions can be met. ・The acceleration/deceleration time constant to reach 2000 r/min is 5 s or shorter. ・The speed is 150 r/min or faster. ・The load to motor inertia ratio is 100 times or smaller. ・The acceleration/deceleration torque is 10% or higher of the rated torque.
		2. The load to motor inertia ratio was not estimated due to an oscillation or other influences.	Set the auto tuning mode that does not estimate the load to motor inertia ratio as follows, and then execute the one-touch tuning. ・Select "Auto tuning mode 2 (_ _ _ 2)", "Manual mode (_ _ _ 3)", or "2 gain adjustment mode 2 (_ _ _ 4)" of "Gain adjustment mode selection" in [Pr. PA08]. ・Manually set [Pr. PB06 Load to motor inertia ratio] properly.
C00F	One-touch tuning disabled	"One-touch tuning function selection" in [Pr. PA21] is "Disabled (_ _ _ 0)".	Select "Enabled (_ _ _ 1)".

(5) If an alarm occurs

If an alarm occurs during one-touch tuning, the tuning will be forcibly terminated.

Remove the cause of the alarm and execute one-touch tuning again.

(6) If a warning occurs

If a warning which continues the motor driving occurs during one-touch tuning, the tuning will be continued.

If a warning which does not continue the motor driving occurs during one-touch tuning, the tuning will be stopped.

(7) Clearing one-touch tuning

You can clear the parameter values set with one-touch tuning.
Refer to table 6.1 for the parameters which you can clear.
Pushing "Return to before tuning" in the one-touch tuning window of MR Configurator2 can restore the parameter setting value before the start button is pushed.
In addition, pushing "Return to initial value" in the one-touch tuning window can restore the initial value.

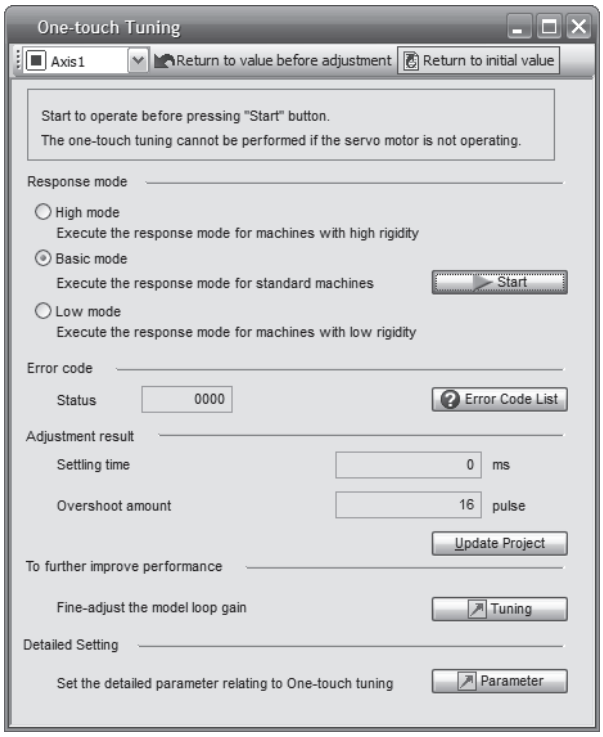

When clearing one-touch tuning is completed, the following window will be displayed. (When restoring the initial value)

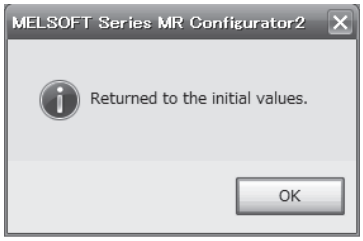

6.2.3 Caution for one-touch tuning

(1) The tuning cannot be executed in the torque control mode.

(2) The one-touch tuning cannot be executed while an alarm or warning which does not continue the motor driving is occurring.

(3) The tuning cannot be executed during the following test operation mode.

(a) Output signal (DO) forced output

(b) Motor-less operation

6.3 Auto tuning

6.3.1 Auto tuning mode

The servo amplifier has a real-time auto tuning function which estimates the machine characteristic (load to motor inertia ratio) in real time and automatically sets the optimum gains according to that value. This function permits ease of gain adjustment of the servo amplifier.

(1) Auto tuning mode 1

The servo amplifier is factory-set to the auto tuning mode 1.
In this mode, the load to motor inertia ratio of a machine is always estimated to set the optimum gains automatically.
The following parameters are automatically adjusted in the auto tuning mode 1.

Parameter	Symbol	Name
PB06	GD2	Load to motor inertia ratio
PB07	PG1	Model loop gain
PB08	PG2	Position loop gain
PB09	VG2	Speed loop gain
PB10	VIC	Speed integral compensation

POINT

●The auto tuning mode 1 may not be performed properly if all of the following conditions are not satisfied.
- The acceleration/deceleration time constant to reach 2000 r/min is 5 s or shorter.
- The speed is 150 r/min or faster.
- The load to motor inertia ratio is 100 times or smaller.
- The acceleration/deceleration torque is 10% or higher of the rated torque.

●Under operating conditions which will impose sudden disturbance torque during acceleration or deceleration or on a machine which is extremely loose, auto tuning may not function properly, either. In such cases, use the auto tuning mode 2 or manual mode to make gain adjustment.

(2) Auto tuning mode 2

Use the auto tuning mode 2 when proper gain adjustment cannot be made by auto tuning mode 1. Since the load to motor inertia ratio is not estimated in this mode, set the value of a correct load to motor inertia ratio in [Pr. PB06].
The following parameters are automatically adjusted in the auto tuning mode 2.

Parameter	Symbol	Name
PB07	PG1	Model loop gain
PB08	PG2	Position loop gain
PB09	VG2	Speed loop gain
PB10	VIC	Speed integral compensation

6.3.2 Auto tuning mode basis

The block diagram of real-time auto tuning is shown below.

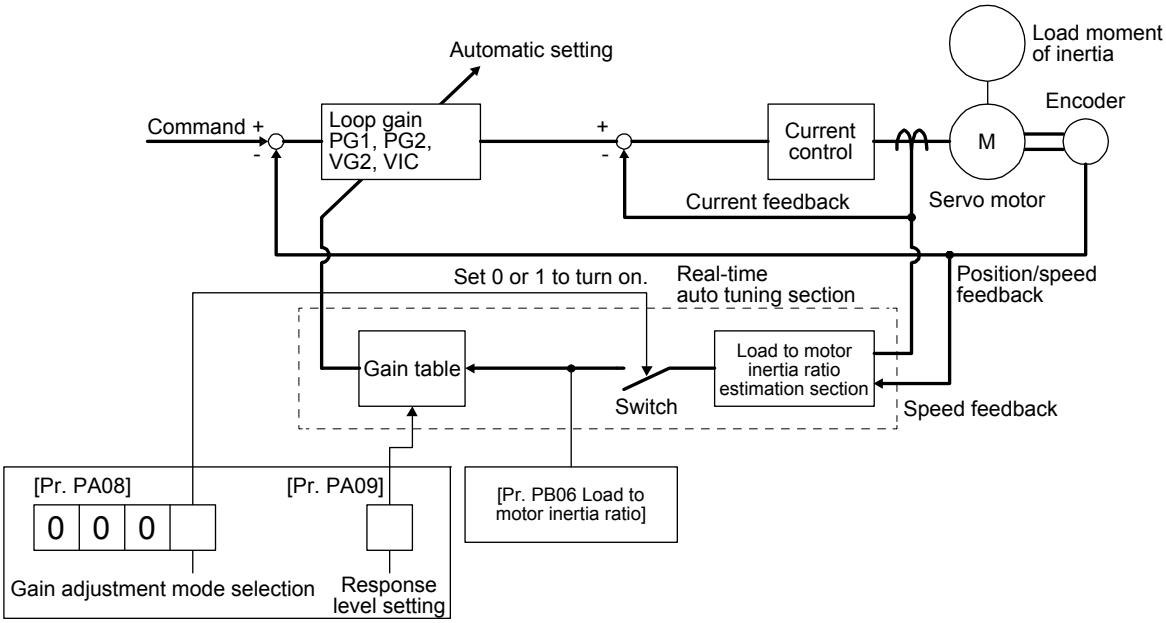

When a servo motor is accelerated or decelerated, the load to motor inertia ratio estimation section always estimates the load to motor inertia ratio from the current and speed of the servo motor. The results of the estimation are written to [Pr. PB06 Load to motor inertia ratio]. These results can be confirmed on the status display window of MR Configurator2.
If you have already known the value of the load to motor inertia ratio or failed to estimate, set "Gain adjustment mode selection" to "Auto tuning mode 2 (_ _ _ 2)" in [Pr. PA08] to stop the estimation (turning off the switch in the above diagram), and set the load to motor inertia ratio ([Pr. PB06]) manually.
From the preset load to motor inertia ratio ([Pr. PB06]) value and response ([Pr. PA09]), the optimum loop gains are automatically set on the basis of the internal gain table.
The auto tuning results are saved in the EEP-ROM of the servo amplifier every 60 minutes since power-on. At power-on, auto tuning is performed with the value of each loop gain saved in the EEP-ROM being used as an initial value.

POINT

- If sudden disturbance torque is imposed during operation, the load to motor inertia ratio may be misestimated temporarily. In such a case, set "Gain adjustment mode selection" to "Auto tuning mode 2 (_ _ _ 2)" in [Pr. PA08] and then set the correct load to motor inertia ratio in [Pr. PB06].
- When any of the auto tuning mode 1 and auto tuning mode 2 is changed to the manual mode, the current loop gains and load to motor inertia ratio estimation value are saved in the EEP-ROM.

6.3.3 Adjustment procedure by auto tuning

Since auto tuning is enabled before shipment from the factory, simply running the servo motor automatically sets the optimum gains that match the machine. Merely changing the response level setting value as required completes the adjustment. The adjustment procedure is as follows.

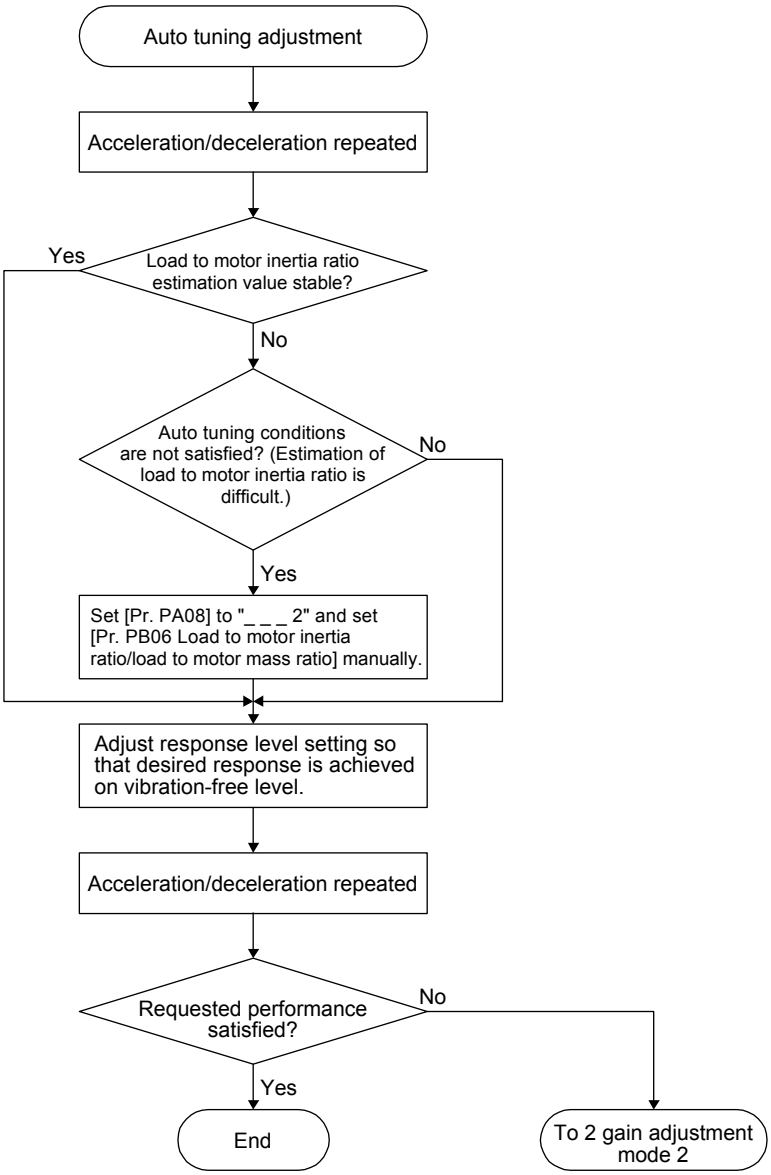

6.3.4 Response level setting in auto tuning mode

Set the response of the whole servo system by [Pr. PA09]. As the response level setting is increased, the track ability and settling time for a command decreases, but too high a response level will generate vibration. Hence, make setting until desired response is obtained within the vibration-free range.
If the response level setting cannot be increased up to the desired response because of machine resonance beyond 100 Hz, filter tuning mode selection in [Pr. PB01] or machine resonance suppression filter in [Pr. PB13] to [Pr. PB16], and [Pr. PB46] to [Pr. PB51] may be used to suppress machine resonance.
Suppressing machine resonance may allow the response level setting to increase. Refer to section 7.1.1 and 7.1.2 for settings of the adaptive tuning mode and machine resonance suppression filter.

[Pr. PA09]

Setting value	Machine characteristic		Reference (setting value of MR-J3)
	Response	Guideline for the machine resonance frequency [Hz]	
1	Low response	2.7	
2		3.6	
3		4.9	
4		6.6	
5		10.0	1
6		11.3	2
7		12.7	3
8		14.3	4
9		16.1	5
10		18.1	6
11		20.4	7
12		23.0	8
13		25.9	9
14		29.2	10
15		32.9	11
16		37.0	12
17		41.7	13
18		47.0	14
19	Middle response	52.9	15
20		59.6	16

Setting value	Machine characteristic		Reference (setting value of MR-J3)
	Response	Guideline for the machine resonance frequency [Hz]	
21	Middle response	67.1	17
22		75.6	18
23		85.2	19
24		95.9	20
25		108.0	21
26		121.7	22
27		137.1	23
28		154.4	24
29		173.9	25
30		195.9	26
31		220.6	27
32		248.5	28
33		279.9	29
34		315.3	30
35		355.1	31
36		400.0	32
37		446.6	
38		501.2	
39	High response	571.5	
40		642.7	

6.4 Manual mode

If you are not satisfied with the adjustment of auto tuning, you can make simple manual adjustment with three parameters.

> POINT
>
> ●If machine resonance occurs, filter tuning mode selection in [Pr. PB01] or machine resonance suppression filter in [Pr. PB13] to [Pr. PB16] and [Pr. PB46] to [Pr. PB51] may be used to suppress machine resonance. (Refer to section 7.1.1 and 7.1.2.)

(1) For speed control

(a) Parameter

The following parameters are used for gain adjustment.

Parameter	Symbol	Name
PB06	GD2	Load to motor inertia ratio
PB07	PG1	Model loop gain
PB09	VG2	Speed loop gain
PB10	VIC	Speed integral compensation

(b) Adjustment procedure

Step	Operation	Description
1	Adjust gains briefly with auto tuning. Refer to section 6.3.3.	
2	Change the setting of auto tuning to the manual mode ([Pr. PA08]: _ _ _ 3).	
3	Set an estimated value to the load to motor inertia ratio. (If the estimate value with auto tuning is correct, setting change is not required.)	
4	Set a slightly smaller value to the model loop gain. Set a slightly larger value to the speed integral compensation.	
5	Increase the speed loop gain within the vibration- and unusual noise-free range, and return the gain slightly if vibration takes place.	Increase the speed loop gain.
6	Decrease the speed integral compensation within the vibration-free range, and return the compensation slightly if vibration takes place.	Decrease the time constant of the speed integral compensation.
7	Increase the model loop gain, and return the gain slightly if overshoot takes place.	Increase the model loop gain.
8	If the gains cannot be increased due to mechanical system resonance or the like and the desired response cannot be achieved, response may be increased by suppressing resonance with the adaptive tuning mode or machine resonance suppression filter and then executing steps 3 to 7.	Suppression of machine resonance Refer to section 7.1.1 and 7.1.2.
9	While checking the motor status, fine-adjust each gain.	Fine adjustment

(c) Parameter adjustment

1) [Pr. PB09 Speed loop gain]

This parameter determines the response level of the speed control loop. Increasing the setting increases the response level, but the mechanical system is liable to vibrate. The actual response frequency of the speed loop is as indicated in the following expression.

$$\text{Speed loop response frequency [Hz]} = \frac{\text{Speed loop gain}}{(1 + \text{Load to motor inertia ratio}) \times 2\pi}$$

2) [Pr. PB10 Speed integral compensation]

To eliminate stationary deviation against a command, the speed control loop is under proportional integral control. For the speed integral compensation, set the time constant of this integral control. Increasing the setting lowers the response level. However, if the load to motor inertia ratio is large or the mechanical system has any vibratory element, the mechanical system is liable to vibrate unless the setting is increased to some degree. The guideline is as indicated in the following expression.

$$\text{Speed integral compensation setting [ms]} \geq \frac{2000 \text{ to } 3000}{\text{Speed loop gain}/(1 + \text{Load to motor inertia ratio})}$$

3) [Pr. PB07 Model loop gain]

This parameter determines the response level to a speed command. Increasing the value improves track ability to a speed command, but too high a value will make overshoot liable to occur at settling.

$$\text{Estimated model loop gain} \leq \frac{\text{Speed loop gain}}{(1 + \text{Load to motor inertia ratio})} \times \left(\frac{1}{4} \text{ to } \frac{1}{8}\right)$$

(2) For position control

(a) Parameter

The following parameters are used for gain adjustment.

Parameter	Symbol	Name
PB06	GD2	Load to motor inertia ratio
PB07	PG1	Model loop gain
PB08	PG2	Position loop gain
PB09	VG2	Speed loop gain
PB10	VIC	Speed integral compensation

(b) Adjustment procedure

Step	Operation	Description
1	Adjust gains briefly with auto tuning. Refer to section 6.3.3.	
2	Change the setting of auto tuning to the manual mode ([Pr. PA08]: _ _ _ 3).	
3	Set an estimated value to the load to motor inertia ratio. (If the estimate value with auto tuning is correct, setting change is not required.)	
4	Set a slightly smaller value to the model loop gain and the position loop gain. Set a slightly larger value to the speed integral compensation.	
5	Increase the speed loop gain within the vibration- and unusual noise-free range, and return the gain slightly if vibration takes place.	Increase the speed loop gain.
6	Decrease the speed integral compensation within the vibration-free range, and return the compensation slightly if vibration takes place.	Decrease the time constant of the speed integral compensation.
7	Increase the position loop gain, and return the gain slightly if vibration takes place.	Increase the position loop gain.
8	Increase the model loop gain, and return the gain slightly if overshoot takes place.	Increase the model loop gain.
9	If the gains cannot be increased due to mechanical system resonance or the like and the desired response cannot be achieved, response may be increased by suppressing resonance with the adaptive tuning mode or machine resonance suppression filter and then executing steps 3 to 8.	Suppression of machine resonance Section 7.1.1 and 7.1.2
10	While checking the settling characteristic and motor status, fine-adjust each gain.	Fine adjustment

(c) Parameter adjustment

1) [Pr. PB09 Speed loop gain]

This parameter determines the response level of the speed control loop. Increasing the setting increases the response level, but the mechanical system is liable to vibrate. The actual response frequency of the speed loop is as indicated in the following expression.

$$\text{Speed loop response frequency [Hz]} = \frac{\text{Speed loop gain}}{(1 + \text{Load to motor inertia ratio}) \times 2\pi}$$

2) [Pr. PB10 Speed integral compensation]

To eliminate stationary deviation against a command, the speed control loop is under proportional integral control. For the speed integral compensation, set the time constant of this integral control. Increasing the setting lowers the response level. However, if the load to motor inertia ratio is large or the mechanical system has any vibratory element, the mechanical system is liable to vibrate unless the setting is increased to some degree. The guideline is as indicated in the following expression.

$$\text{Speed integral compensation setting [ms]} \geq \frac{2000 \text{ to } 3000}{\text{Speed loop gain}/(1 + \text{Load to motor inertia ratio})}$$

3) [Pr. PB08 Position loop gain]
This parameter determines the response level to a disturbance to the position control loop. Increasing the position loop gain increases the response level to a disturbance, but the mechanical system is liable to vibrate.

$$\text{Position loop gain guideline} \leq \frac{\text{Speed loop gain}}{(1 + \text{Load to motor inertia ratio})} \times \left(\frac{1}{4} \text{ to } \frac{1}{8}\right)$$

4) [Pr. PB07 Model loop gain]
This parameter determines the response level to a position command. Increasing the value improves track ability to a position command, but too high a value will make overshoot liable to occur at settling.

$$\text{Estimated model loop gain} \leq \frac{\text{Speed loop gain}}{(1 + \text{Load to motor inertia ratio})} \times \left(\frac{1}{4} \text{ to } \frac{1}{8}\right)$$

6.5 2 Gain adjustment mode

The 2 gain adjustment mode is used to match the position loop gains of the axes in the interpolation operation of servo motors of two or more axes for an X-Y table or the like. In this mode, manually set the model loop gain that determines command track ability. Other parameters for gain adjustment are set automatically.

(1) 2 gain adjustment mode 1
For the 2 gain adjustment mode 1, manually set the model loop gain that determines command track ability. The mode constantly estimates the load to motor inertia ratio, and automatically sets other parameters for gain adjustment to optimum gains using auto tuning response.
The following parameters are used for 2 gain adjustment mode 1.

(a) Automatically adjusted parameter
The following parameters are automatically adjusted by auto tuning.

Parameter	Symbol	Name
PB06	GD2	Load to motor inertia ratio
PB08	PG2	Position loop gain
PB09	VG2	Speed loop gain
PB10	VIC	Speed integral compensation

(b) Manually adjusted parameter
The following parameters are adjustable manually.

Parameter	Symbol	Name
PA09	RSP	Auto tuning response
PB07	PG1	Model loop gain

(2) 2 gain adjustment mode 2

Use 2 gain adjustment mode 2 when proper gain adjustment cannot be made with 2 gain adjustment mode 1. Since the load to motor inertia ratio is not estimated in this mode, set the value of a proper load to motor inertia ratio in [Pr. PB06].

The following parameters are used for 2 gain adjustment mode 2.

(a) Automatically adjusted parameter

The following parameters are automatically adjusted by auto tuning.

Parameter	Symbol	Name
PB08	PG2	Position loop gain
PB09	VG2	Speed loop gain
PB10	VIC	Speed integral compensation

(b) Manually adjusted parameter

The following parameters are adjustable manually.

Parameter	Symbol	Name
PA09	RSP	Auto tuning response
PB06	GD2	Load to motor inertia ratio
PB07	PG1	Model loop gain

(3) Adjustment procedure of 2 gain adjustment mode

POINT

●Set the same value in [Pr. PB07 Model loop gain] for the axis used in the 2 gain adjustment mode.

Step	Operation	Description
1	Set the auto tuning mode.	Select the auto tuning mode 1.
2	During operation, increase the response level setting value in [Pr. PA09], and return the setting if vibration occurs.	Adjustment in auto tuning mode 1
3	Check value of the model loop gain and the load to motor inertia ratio in advance.	Check the upper setting limits.
4	Set the 2 gain adjustment mode 1 ([Pr. PA08]: _ _ _ 0).	Select the 2 gain adjustment mode 1 (interpolation mode).
5	When the load to motor inertia ratio is different from the design value, select the 2 gain adjustment mode 2 ([Pr. PA08]: _ _ _ 4) and then set the load to motor inertia ratio manually in [Pr. PB06].	Check the load to motor inertia ratio.
6	Set the model loop gain of all the axes to be interpolated to the same value. At that time, adjust the values to the setting value of the axis which has the smallest model loop gain.	Set position loop gain.
7	Considering the interpolation characteristic and motor status, fine-adjust the model loop gain and response level setting.	Fine adjustment

(4) Parameter adjustment

[Pr. PB07 Model loop gain]

This parameter determines the response level of the position control loop. Increasing the value improves track ability to a position command, but too high a value will make overshoot liable to occur at settling. The droop pulse value is determined by the following expression.

$$\text{Number of droop pulses [pulse]} = \frac{\text{Position command frequency [pulse/s]}}{\text{Model loop gain setting}}$$

$$\text{Position command frequency} = \frac{\text{Speed [r/min]}}{60} \times \text{Encoder resolution (number of pulses per servo motor revolution)}$$

7. SPECIAL ADJUSTMENT FUNCTIONS

POINT

- The functions given in this chapter need not be used normally. Use them if you are not satisfied with the machine status after making adjustment in the methods in chapter 6.

7.1 Filter setting

The following filters are available with MR-JE servo amplifiers.

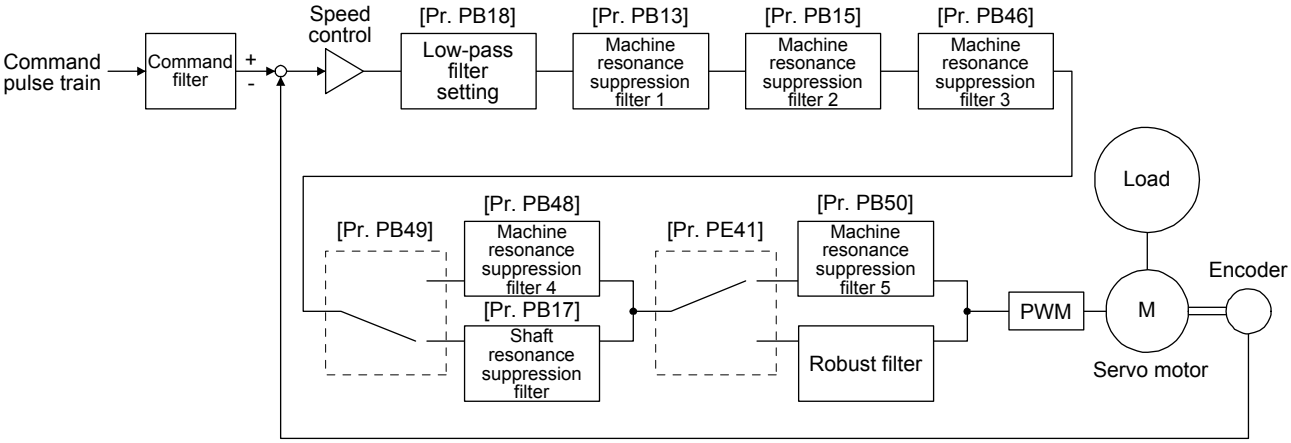

7.1.1 Machine resonance suppression filter

POINT

- The machine resonance suppression filter is a delay factor for the servo system. Therefore, vibration may increase if you set an incorrect resonance frequency or set notch characteristics too deep or too wide.
- If the frequency of machine resonance is unknown, decrease the notch frequency from higher to lower ones in order. The optimum notch frequency is set at the point where vibration is minimal.
- A deeper notch has a higher effect on machine resonance suppression but increases a phase delay and may increase vibration.
- A wider notch has a higher effect on machine resonance suppression but increases a phase delay and may increase vibration.
- The machine characteristic can be grasped beforehand by the machine analyzer on MR Configurator2. This allows the required notch frequency and notch characteristics to be determined.

If a mechanical system has a natural resonance point, increasing the servo system response level may cause the mechanical system to produce resonance (vibration or unusual noise) at that resonance frequency. Using the machine resonance suppression filter and adaptive tuning can suppress the resonance of the mechanical system. The setting range is 10 Hz to 4500 Hz.

(1) Function

The machine resonance suppression filter is a filter function (notch filter) which decreases the gain of the specific frequency to suppress the resonance of the mechanical system. You can set the gain decreasing frequency (notch frequency), gain decreasing depth, and width.

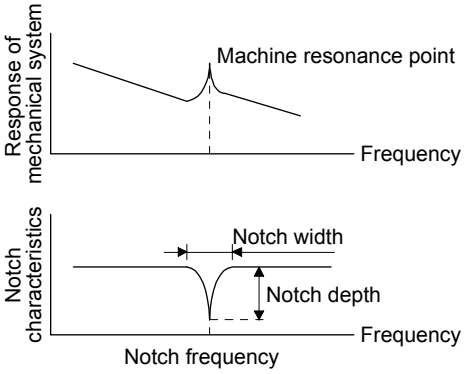

You can set five machine resonance suppression filters at most.

Filter	Setting parameter	Precaution	Parameter that is reset with vibration tough drive function	Parameter automatically adjusted with one-touch tuning
Machine resonance suppression filter 1	PB01/PB13/PB14	The filter can be set automatically with "Filter tuning mode selection" in [Pr. PB01].	PB13	PB01/PB13/PB14
Machine resonance suppression filter 2	PB15/PB16		PB15	PB15/PB16
Machine resonance suppression filter 3	PB46/PB47			PB47
Machine resonance suppression filter 4	PB48/PB49	Enabling the machine resonance suppression filter 4 disables the shaft resonance suppression filter. Using the shaft resonance suppression filter is recommended because it is adjusted properly depending on the usage situation. The shaft resonance suppression filter is enabled for the initial setting.		PB48/PB49
Machine resonance suppression filter 5	PB50/PB51	Enabling the robust filter disables the machine resonance suppression filter 5. The robust filter is disabled for the initial setting.		PB51

(2) Parameter

(a) Machine resonance suppression filter 1 ([Pr. PB13] and [Pr. PB14])

Set the notch frequency, notch depth, and notch width of the machine resonance suppression filter 1 ([Pr. PB13] and [Pr. PB14]).

When you select "Manual setting (_ _ _ 2)" of "Filter tuning mode selection" in [Pr. PB01], the setting of the machine resonance suppression filter 1 is enabled.

(b) Machine resonance suppression filter 2 ([Pr. PB15] and [Pr. PB16])

To use this filter, select "Enabled (_ _ _ 1)" of "Machine resonance suppression filter 2 selection" in [Pr. PB16].

How to set the machine resonance suppression filter 2 ([Pr. PB15] and [Pr. PB16]) is the same as for the machine resonance suppression filter 1 ([Pr. PB13] and [Pr. PB14]).

(c) Machine resonance suppression filter 3 ([Pr. PB46] and [Pr. PB47])

To use this filter, select "Enabled (_ _ _ 1)" of "Machine resonance suppression filter 3 selection" in [Pr. PB47].

How to set the machine resonance suppression filter 3 ([Pr. PB46] and [Pr. PB47]) is the same as for the machine resonance suppression filter 1 ([Pr. PB13] and [Pr. PB14]).

(d) Machine resonance suppression filter 4 ([Pr. PB48] and [Pr. PB49])

To use this filter, select "Enabled (_ _ _ 1)" of "Machine resonance suppression filter 4 selection" in [Pr. PB49]. However, enabling the machine resonance suppression filter 4 disables the shaft resonance suppression filter.

How to set the machine resonance suppression filter 4 ([Pr. PB48] and [Pr. PB49]) is the same as for the machine resonance suppression filter 1 ([Pr. PB13] and [Pr. PB14]).

(e) Machine resonance suppression filter 5 ([Pr. PB50] and [Pr. PB51])

To use this filter, select "Enabled (_ _ _ 1)" of "Machine resonance suppression filter 5 selection" in [Pr. PB51]. However, enabling the robust filter ([Pr. PE41]: _ _ _ 1) disables the machine resonance suppression filter 5.

How to set the machine resonance suppression filter 5 ([Pr. PB50] and [Pr. PB51]) is the same as for the machine resonance suppression filter 1 ([Pr. PB13] and [Pr. PB14]).

7.1.2 Adaptive filter II

POINT

- The machine resonance frequency which adaptive filter II (adaptive tuning) can respond to is about 100 Hz to 2.25 kHz. As for the resonance frequency out of the range, set manually.
- When adaptive tuning is executed, vibration sound increases as an excitation signal is forcibly applied for several seconds.
- When adaptive tuning is executed, machine resonance is detected for a maximum of 10 seconds and a filter is generated. After filter generation, the adaptive tuning mode automatically shifts to the manual setting.
- Adaptive tuning generates the optimum filter with the currently set control gains. If vibration occurs when the response setting is increased, execute adaptive tuning again.
- During adaptive tuning, a filter having the best notch depth at the set control gain is generated. To allow a filter margin against machine resonance, increase the notch depth in the manual setting.
- Adaptive vibration suppression control may provide no effect on a mechanical system which has complex resonance characteristics.

(1) Function

Adaptive filter II (adaptive tuning) is a function in which the servo amplifier detects machine vibration for a predetermined period of time and sets the filter characteristics automatically to suppress mechanical system vibration. Since the filter characteristics (frequency, depth) are set automatically, you need not be conscious of the resonance frequency of a mechanical system.

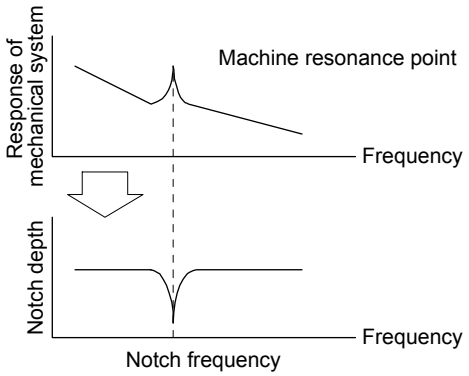

When machine resonance is large and frequency is low

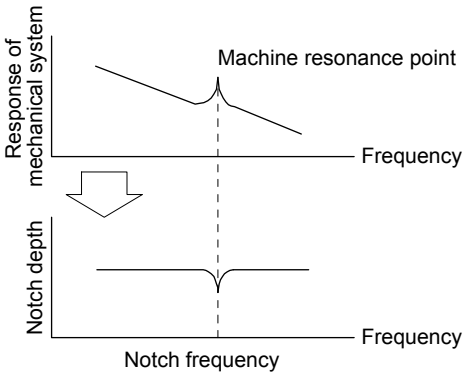

When machine resonance is small and frequency is high

(2) Parameter

Select how to set the filter tuning in [Pr. PB01 Adaptive tuning mode (adaptive filter II)].

[Pr. PB01]

0	0	0	

Filter tuning mode selection

Setting value	Filter tuning mode selection	Automatically set parameter
0	Disabled	
1	Automatic setting	PB13/PB14
2	Manual setting	

(3) Adaptive tuning mode procedure

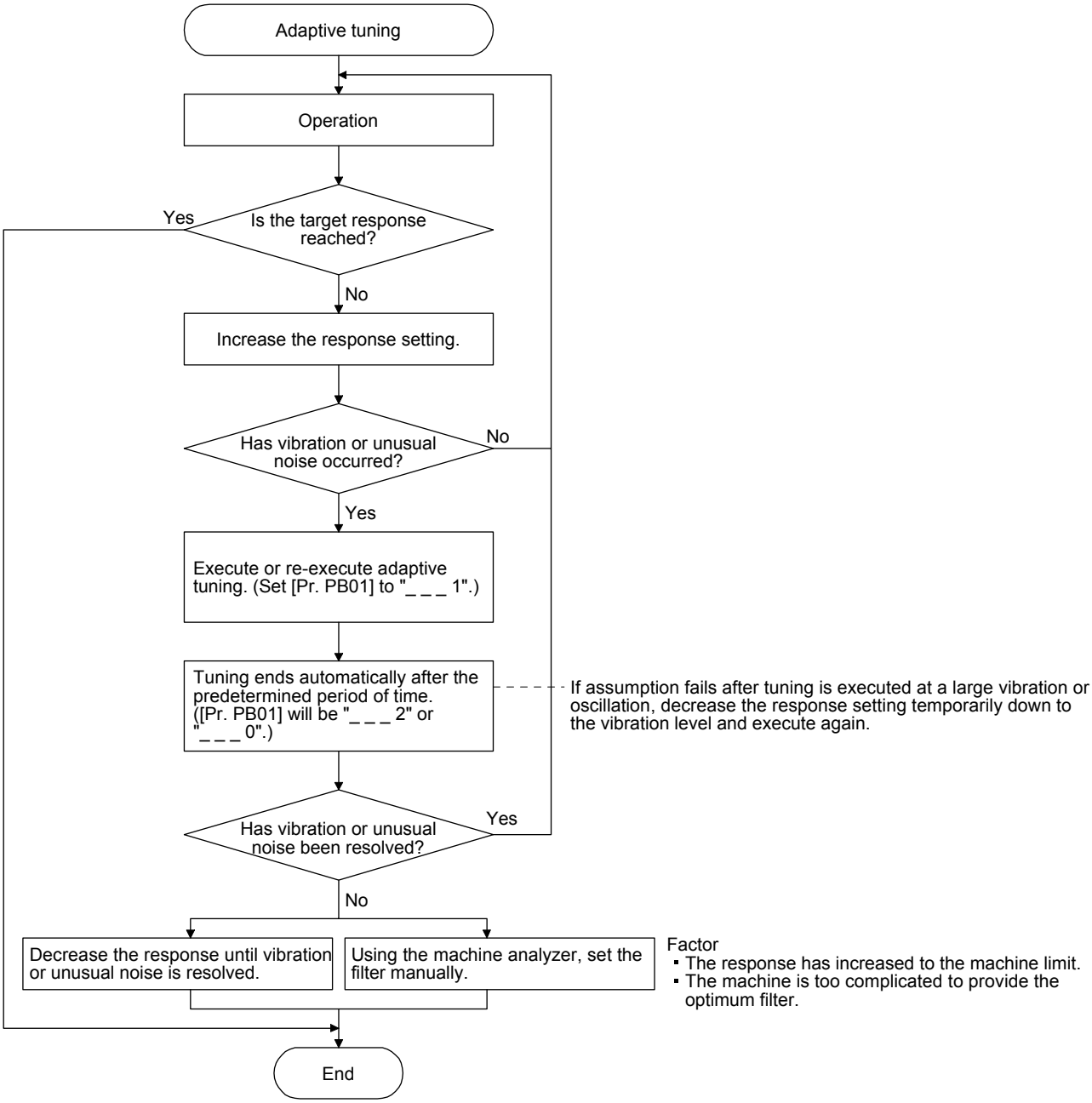

7.1.3 Shaft resonance suppression filter

> **POINT**
>
> ●This filter is set properly by default according to the servo motor you use and load moment of inertia. For [Pr. PB23], "_ _ _ 0" (automatic setting) is recommended because setting "Shaft resonance suppression filter selection" in [Pr. PB23] or setting [Pr. PB17 Shaft resonance suppression filter] can degrades in performance.

(1) Function

When a load is mounted to the servo motor shaft, resonance by shaft torsion during driving may generate a mechanical vibration at high frequency. The shaft resonance suppression filter suppresses the vibration.

When you select "Automatic setting", the filter will be set automatically on the basis of the servo motor you use and the load to motor inertia ratio. The disabled setting increases the response of the servo amplifier for high resonance frequency.

(2) Parameter

Set "Shaft resonance suppression filter selection" in [Pr. PB23].

[Pr. PB23]

0	0	0	

Shaft resonance suppression filter selection
0: Automatic setting
1: Manual setting
2: Disabled

To set [Pr. PB17 Shaft resonance suppression filter] automatically, select "Automatic setting".

To set [Pr. PB17 Shaft resonance suppression filter] manually, select "Manual setting". The setting values are as follows.

Shaft resonance suppression filter setting frequency selection

Setting value	Frequency [Hz]	Setting value	Frequency [Hz]
_ _ 0 0	Disabled	_ _ 1 0	562
_ _ 0 1	Disabled	_ _ 1 1	529
_ _ 0 2	4500	_ _ 1 2	500
_ _ 0 3	3000	_ _ 1 3	473
_ _ 0 4	2250	_ _ 1 4	450
_ _ 0 5	1800	_ _ 1 5	428
_ _ 0 6	1500	_ _ 1 6	409
_ _ 0 7	1285	_ _ 1 7	391
_ _ 0 8	1125	_ _ 1 8	375
_ _ 0 9	1000	_ _ 1 9	360
_ _ 0 A	900	_ _ 1 A	346
_ _ 0 B	818	_ _ 1 B	333
_ _ 0 C	750	_ _ 1 C	321
_ _ 0 D	692	_ _ 1 D	310
_ _ 0 E	642	_ _ 1 E	300
_ _ 0 F	600	_ _ 1 F	290

7.1.4 Low-pass filter

(1) Function

When a ball screw or the like is used, resonance of high frequency may occur as the response level of the servo system is increased. To prevent this, the low-pass filter is enabled for a torque command as the initial value. The filter frequency of the low-pass filter is automatically adjusted to the value in the following equation.

$$\text{Filter frequency ([rad/s])} = \frac{VG2}{1 + GD2} \times 10$$

However, when an automatically adjusted value is smaller than VG2, the filter frequency will be the VG2 value.

To set [Pr. PB18] manually, select "Manual setting (_ _ 1 _)" of "Low-pass filter selection" in [Pr. PB23].

(2) Parameter

Set "Low-pass filter selection" in [Pr. PB23].

[Pr. PB23]

0	0		0

Low-pass filter selection
0: Automatic setting
1: Manual setting
2: Disabled

7.1.5 Advanced vibration suppression control II

POINT

- The function is enabled when "Gain adjustment mode selection" in [Pr. PA08] is "Auto tuning mode 2 (_ _ _ 2)", "Manual mode (_ _ _ 3)", or "2 gain adjustment mode 2 (_ _ _ 4)".
- The machine resonance frequency supported in the vibration suppression control tuning mode is 1.0 Hz to 100.0 Hz. As for the vibration out of the range, set manually.
- Stop the servo motor before changing the vibration suppression control-related parameters. Otherwise, it may cause an unexpected operation.
- For positioning operation during execution of vibration suppression control tuning, provide a stop time to ensure a stop after vibration damping.
- Vibration suppression control tuning may not make normal estimation if the residual vibration at the servo motor side is small.
- Vibration suppression control tuning sets the optimum parameter with the currently set control gains. When the response setting is increased, set vibration suppression control tuning again.
- When using the vibration suppression control 2, set "_ _ _ 1" in [Pr. PA24].

(1) Function

Vibration suppression control is used to further suppress load-side vibration, such as work-side vibration and base shake. The servo motor-side operation is adjusted for positioning so that the machine does not vibrate.

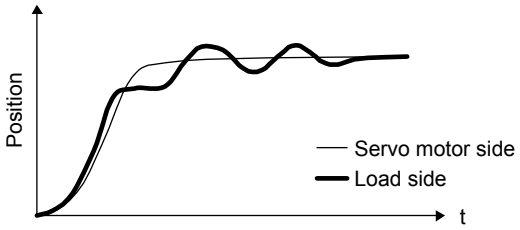

Vibration suppression: off (normal)

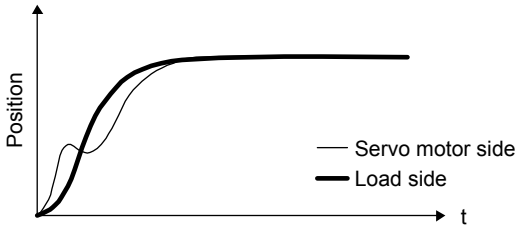

Vibration suppression control: on

When the advanced vibration suppression control II ([Pr. PB02 Vibration suppression control tuning mode]) is executed, the vibration frequency at load side is automatically estimated to suppress machine side vibration two times at most.

In the vibration suppression control tuning mode, this mode shifts to the manual setting after the positioning operation is performed the predetermined number of times. For manual setting, adjust the vibration suppression control 1 with [Pr. PB19] to [Pr. PB22] and vibration suppression control 2 with [Pr. PB52] to [Pr. PB55].

(2) Parameter

Set [Pr. PB02 Vibration suppression control tuning mode (advanced vibration suppression control II)]. When you use a vibration suppression control, set "Vibration suppression control 1 tuning mode selection". When you use two vibration suppression controls, set "Vibration suppression control 2 tuning mode selection" in addition.

[Pr. PB02]

0	0		

Vibration suppression control 1 tuning mode

Setting value	Vibration suppression control 1 tuning mode selection	Automatically set parameter
_ _ _ 0	Disabled	
_ _ _ 1	Automatic setting	PB19/PB20/PB21/PB22
_ _ _ 2	Manual setting	

Vibration suppression control 2 tuning mode

Setting value	Vibration suppression control 2 tuning mode selection	Automatically set parameter
_ _ 0 _	Disabled	
_ _ 1 _	Automatic setting	PB52/PB53/PB54/PB55
_ _ 2 _	Manual setting	

(3) Vibration suppression control tuning procedure

The following flow chart is for the vibration suppression control 1. For the vibration suppression control 2, set "_ _ 1 _" in [Pr. PB02] to execute the vibration suppression control tuning.

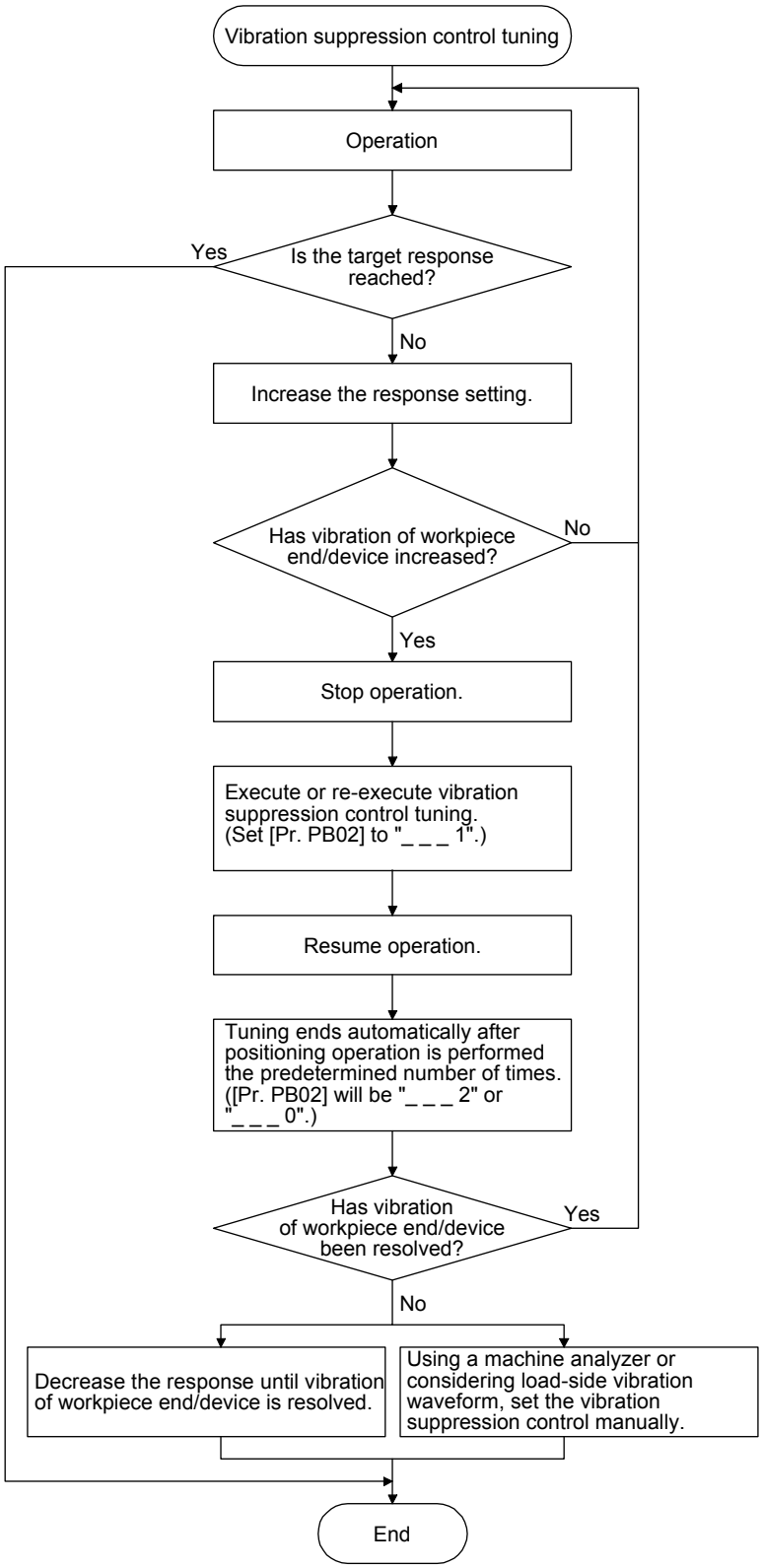

Factor
- Estimation cannot be made as load-side vibration has not been transmitted to the servo motor side.
- The response of the model loop gain has increased to the load-side vibration frequency (vibration suppression control limit).

(4) Vibration suppression control manual mode

POINT

- When load-side vibration does not show up in servo motor-side vibration, the setting of the servo motor-side vibration frequency does not provide an effect.
- When the anti-resonance frequency and resonance frequency can be confirmed using the machine analyzer or external measuring instrument, do not set the same value but set different values to improve the vibration suppression performance.

Measure work-side vibration and device shake with the machine analyzer or external measuring instrument, and set the following parameters to adjust vibration suppression control manually.

Setting item	Vibration suppression control 1	Vibration suppression control 2
Vibration frequency for vibration suppression control	[Pr. PB19]	[Pr. PB52]
Resonance frequency for vibration suppression control	[Pr. PB20]	[Pr. PB53]
Vibration suppression control - Vibration frequency damping	[Pr. PB21]	[Pr. PB54]
Vibration suppression control - Resonance frequency damping	[Pr. PB22]	[Pr. PB55]

Step 1. Select "Manual setting (_ _ _ 2)" of "Vibration suppression control 1 tuning mode selection" or "Manual setting (_ _ 2 _)" of "Vibration suppression control 2 tuning mode selection" in [Pr. PB02].

Step 2. Set "Vibration frequency for vibration suppression control" and "Resonance frequency for vibration suppression control" as follows.

However, the value of [Pr. PB07 Model loop gain], vibration frequency, and resonance frequency have the following usable range and recommended range.

Vibration suppression control	Usable range	Recommended setting range
Vibration suppression control 1	[Pr. PB19] > 1/2π × (0.9 × [Pr. PB07]) [Pr. PB20] > 1/2π × (0.9 × [Pr. PB07])	[Pr. PB19] > 1/2π × (1.5 × [Pr. PB07]) [Pr. PB20] > 1/2π × (1.5 × [Pr. PB07])
Vibration suppression control 2	When [Pr. PB19] < [Pr. PB52], [Pr. PB52] > (5.0 + 0.1 × [Pr. PB07]) [Pr. PB53] > (5.0 + 0.1 × [Pr. PB07]) 1.1 < [Pr. PB52]/[Pr. PB19] < 5.5 [Pr. PB07] < 2π (0.3 × [Pr. PB19] + 1/8 × [Pr. PB52])	When [Pr. PB19] < [Pr. PB52], [Pr. PB52], [Pr. PB53] > 6.25 Hz 1.1 < [Pr. PB52]/[Pr. PB19] < 4 [Pr. PB07] < 1/3 × (4 × [Pr. PB19] + 2 × [Pr. PB52])

(a) When a vibration peak can be confirmed with the machine analyzer using MR Configurator2, or external measuring instrument.

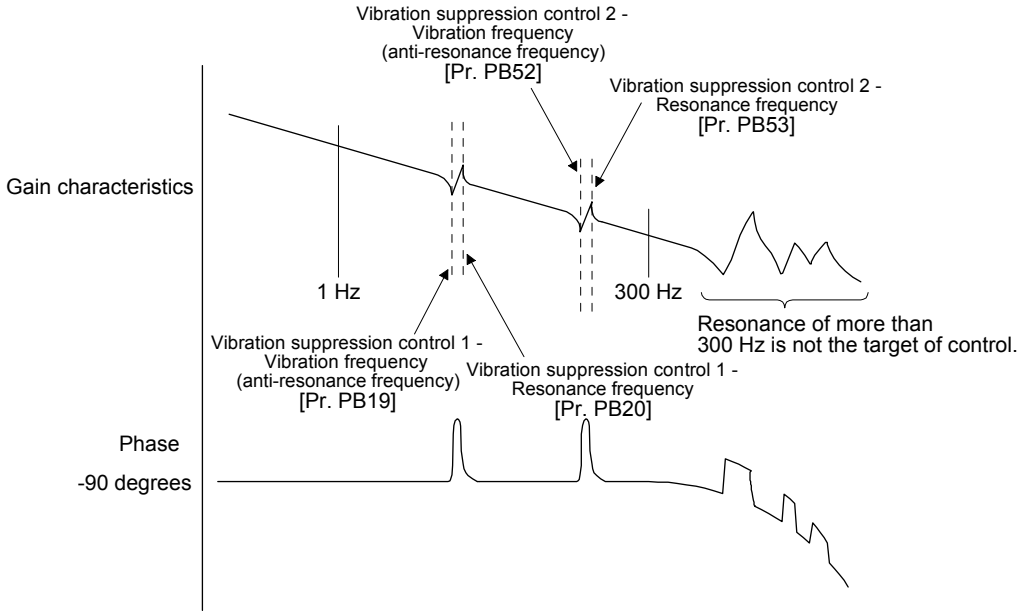

(b) When vibration can be confirmed using monitor signal or external sensor

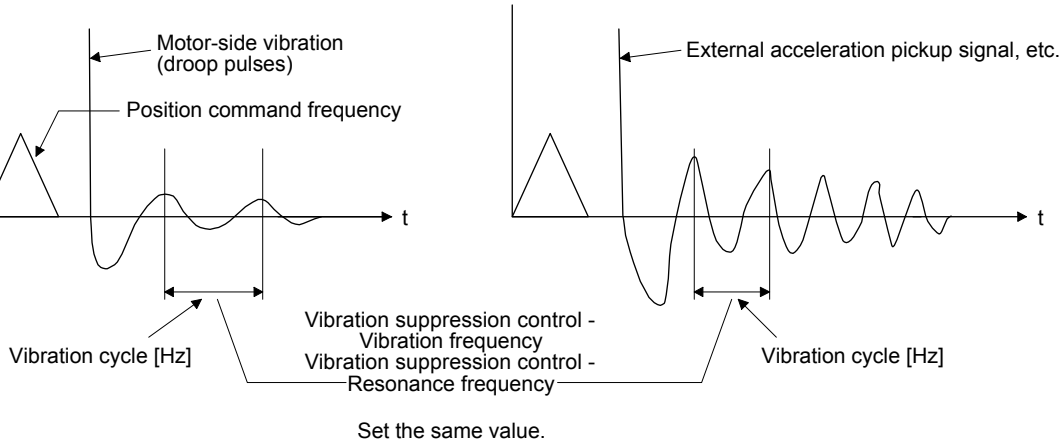

Step 3. Fine-adjust "Vibration suppression control - Vibration frequency damping" and "Vibration suppression control - Resonance frequency damping".

7.1.6 Command notch filter

POINT

- By using the advanced vibration suppression control II and the command notch filter, the load-side vibration of three frequencies can be suppressed.
- The frequency range of machine vibration, which can be supported by the command notch filter, is between 4.5 Hz and 2250 Hz. Set a frequency close to the machine vibration frequency and within the range.
- When [Pr. PB45 Command notch filter] is changed during the positioning operation, the changed setting is not reflected. The setting is reflected approximately 150 ms after the servo motor stops (after servo-lock).

(1) Function

Command notch filter has a function that lowers the gain of the specified frequency contained in a position command. By lowering the gain, load-side vibration, such as work-side vibration and base shake, can be suppressed. Which frequency to lower the gain and how deep to lower the gain can be set.

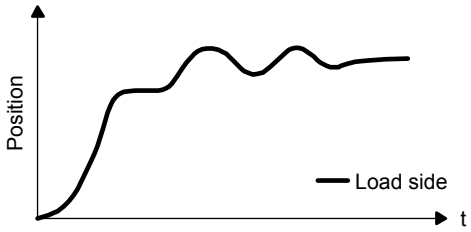

Command notch filter: disabled

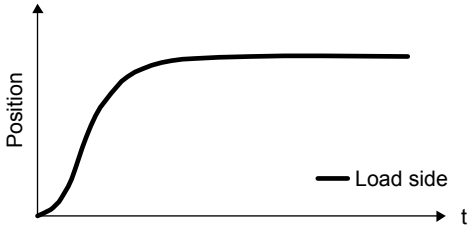

Command notch filter: enabled

(2) Parameter

Set [Pr. PB45 Command notch filter] as shown below. For the command notch filter setting frequency, set the closest value to the vibration frequency [Hz] at the load side.

[Pr. PB45]

0			

Notch depth — Command notch filter setting frequency

Setting value	Depth [dB]
0	-40.0
1	-24.1
2	-18.1
3	-14.5
4	-12.0
5	-10.1
6	-8.5
7	-7.2
8	-6.0
9	-5.0
A	-4.1
B	-3.3
C	-2.5
D	-1.8
E	-1.2
F	-0.6

Setting value	Frequency [Hz]	Setting value	Frequency [Hz]	Setting value	Frequency [Hz]
00	Disabled	20	70	40	17.6
01	2250	21	66	41	16.5
02	1125	22	62	42	15.6
03	750	23	59	43	14.8
04	562	24	56	44	14.1
05	450	25	53	45	13.4
06	375	26	51	46	12.8
07	321	27	48	47	12.2
08	281	28	46	48	11.7
09	250	29	45	49	11.3
0A	225	2A	43	4A	10.8
0B	204	2B	41	4B	10.4
0C	187	2C	40	4C	10.0
0D	173	2D	38	4D	9.7
0E	160	2E	37	4E	9.4
0F	150	2F	36	4F	9.1
10	140	30	35.2	50	8.8
11	132	31	33.1	51	8.3
12	125	32	31.3	52	7.8
13	118	33	29.6	53	7.4
14	112	34	28.1	54	7.0
15	107	35	26.8	55	6.7
16	102	36	25.6	56	6.4
17	97	37	24.5	57	6.1
18	93	38	23.4	58	5.9
19	90	39	22.5	59	5.6
1A	86	3A	21.6	5A	5.4
1B	83	3B	20.8	5B	5.2
1C	80	3C	20.1	5C	5.0
1D	77	3D	19.4	5D	4.9
1E	75	3E	18.8	5E	4.7
1F	72	3F	18.2	5F	4.5

7.2 Gain switching function

You can switch gains with the function. You can switch gains during rotation and during stop, and can use a control command from a controller to switch gains during operation.

7.2.1 Applications

The following shows when you use the function.

(1) You want to increase the gains during servo-lock but decrease the gains to reduce noise during rotation.

(2) You want to increase the gains during settling to shorten the stop settling time.

(3) You want to change the gains using a control command from a controller to ensure stability of the servo system since the load to motor inertia ratio varies greatly during a stop (e.g. a large load is mounted on a carrier).

7.2.2 Function block diagram

The control gains, load to motor inertia ratio, and vibration suppression control settings are changed according to the conditions selected by [Pr. PB26 Gain switching function] and [Pr. PB27 Gain switching condition].

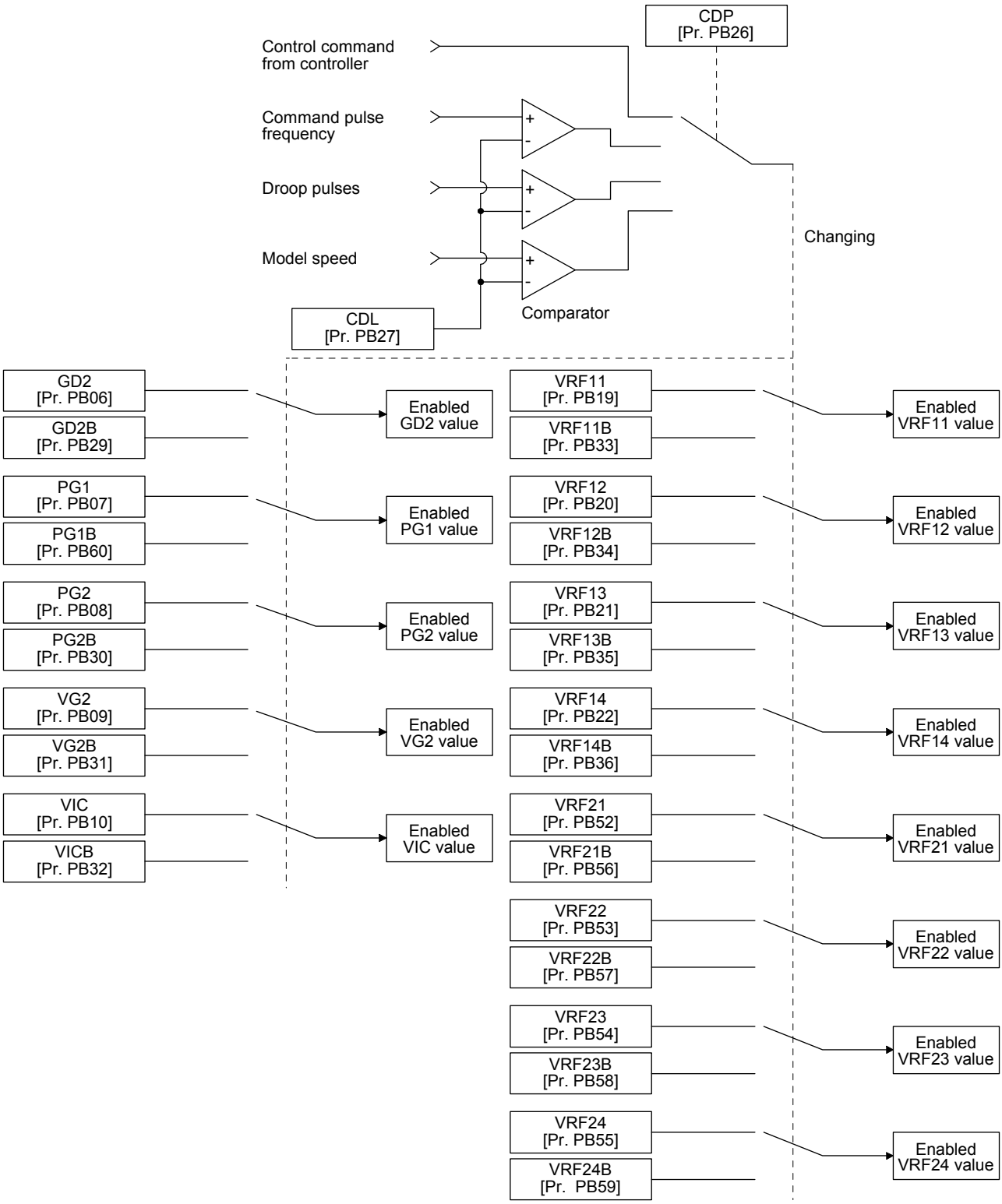

7.2.3 Parameter

When using the gain switching function, always select "Manual mode (_ _ _ 3)" of "Gain adjustment mode selection" in [Pr. PA08 Auto tuning mode]. The gain switching function cannot be used in the auto tuning mode.

(1) Parameters for setting gain switching condition

Parameter	Symbol	Name	Unit	Description
PB26	CDP	Gain switching selection		Used to select the switching condition.
PB27	CDL	Gain switching condition	[kpulse/s] /[pulse] /[r/min]	Used to set the switching condition values.
PB28	CDT	Gain switching time constant	[ms]	You can set the filter time constant for a gain change at switching.

(a) [Pr. PB26 Gain switching function]
This parameter is for setting of the gain switching conditions. Select the switching condition in the first to third digits.

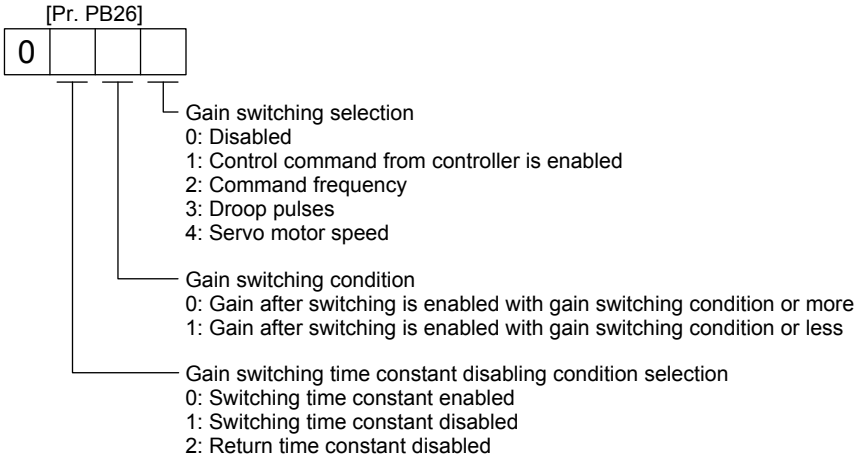

(b) [Pr. PB27 Gain switching condition]
Set a level to switch gains after you select "Command frequency", "Droop pulses", or "Servo motor speed" in [Pr. PB26 Gain switching function].
The setting unit is as follows.

Gain switching condition	Unit
Command frequency	[kpulse/s]
Droop pulses	[pulse]
Servo motor speed	[r/min]

(c) [Pr. PB28 Gain switching time constant]
You can set the primary delay filter to each gain at gain switching. This parameter is used to suppress shock given to the machine if the gain difference is large at gain switching, for example.

(2) Switchable gain parameter

Loop gain	Before switching			After switching		
	Parameter	Symbol	Name	Parameter	Symbol	Name
Load to motor inertia ratio	PB06	GD2	Load to motor inertia ratio	PB29	GD2B	Load to motor inertia ratio after gain switching
Model loop gain	PB07	PG1	Model loop gain	PB60	PG1B	Model loop gain after gain switching
Position loop gain	PB08	PG2	Position loop gain	PB30	PG2B	Position loop gain after gain switching
Speed loop gain	PB09	VG2	Speed loop gain	PB31	VG2B	Speed loop gain after gain switching
Speed integral compensation	PB10	VIC	Speed integral compensation	PB32	VICB	Speed integral compensation after gain switching
Vibration suppression control 1 - Vibration frequency	PB19	VRF11	Vibration suppression control 1 - Vibration frequency	PB33	VRF11B	Vibration suppression control 1 - Vibration frequency after gain switching
Vibration suppression control 1 - Resonance frequency	PB20	VRF12	Vibration suppression control 1 - Resonance frequency	PB34	VRF12B	Vibration suppression control 1 - Resonance frequency after gain switching
Vibration suppression control 1 - Vibration frequency damping	PB21	VRF13	Vibration suppression control 1 - Vibration frequency damping	PB35	VRF13B	Vibration suppression control 1 - Vibration frequency damping after gain switching
Vibration suppression control 1 - Resonance frequency damping	PB22	VRF14	Vibration suppression control 1 - Resonance frequency damping	PB36	VRF14B	Vibration suppression control 1 - Resonance frequency damping after gain switching
Vibration suppression control 2 - Vibration frequency	PB52	VRF21	Vibration suppression control 2 - Vibration frequency	PB56	VRF21B	Vibration suppression control 2 - Vibration frequency after gain switching
Vibration suppression control 2 - Resonance frequency	PB53	VRF22	Vibration suppression control 2 - Resonance frequency	PB57	VRF22B	Vibration suppression control 2 - Resonance frequency after gain switching
Vibration suppression control 2 - Vibration frequency damping	PB54	VRF23	Vibration suppression control 2 - Vibration frequency damping	PB58	VRF23B	Vibration suppression control 2 - Vibration frequency damping after gain switching
Vibration suppression control 2 - Resonance frequency damping	PB55	VRF24	Vibration suppression control 2 - Resonance frequency damping	PB59	VRF24B	Vibration suppression control 2 - Resonance frequency damping after gain switching

(a) [Pr. PB06] to [Pr. PB10]
These parameters are the same as in ordinary manual adjustment. Gain switching allows the values of load to motor inertia ratio, position loop gain, speed loop gain, and speed integral compensation to be switched.

(b) [Pr. PB19] to [Pr. PB22]/[Pr. PB52] to [Pr. PB55]
These parameters are the same as in ordinary manual adjustment. You can switch the vibration frequency, resonance frequency, vibration frequency damping, and resonance frequency damping by switching gain during motor stop.

(c) [Pr. PB29 Load to motor inertia ratio after gain switching]
Set the load to motor inertia ratio after gain switching. If the load to motor inertia ratio does not change, set it to the same value as [Pr. PB06 Load to motor inertia ratio].

(d) [Pr. PB30 Position loop gain after gain switching], [Pr. PB31 Speed loop gain after gain switching], and [Pr. PB32 Speed integral compensation after gain switching]
Set the values of after switching position loop gain, speed loop gain and speed integral compensation.

(e) Vibration suppression control after gain switching ([Pr. PB33] to [Pr. PB36]/[Pr. PB56] to [Pr. PB59])/[Pr. PB60 Model loop gain after gain switching]
The gain switching vibration suppression control and model loop gain are used only with a control command from the controller.
You can switch the vibration frequency, resonance frequency, vibration frequency damping, resonance frequency damping, and model loop gain of the vibration suppression control 1 and vibration suppression control 2.

7.2.4 Gain switching procedure

This operation will be described by way of setting examples.

(1) When you choose switching by a control command from the controller

(a) Setting example

Parameter	Symbol	Name	Setting value	Unit
PB06	GD2	Load to motor inertia ratio	4.00	[Multiplier]
PB07	PG1	Model loop gain	100	[rad/s]
PB08	PG2	Position loop gain	120	[rad/s]
PB09	VG2	Speed loop gain	3000	[rad/s]
PB10	VIC	Speed integral compensation	20	[ms]
PB19	VRF11	Vibration suppression control 1 - Vibration frequency	50	[Hz]
PB20	VRF12	Vibration suppression control 1 - Resonance frequency	50	[Hz]
PB21	VRF13	Vibration suppression control 1 - Vibration frequency damping	0.20	
PB22	VRF14	Vibration suppression control 1 - Resonance frequency damping	0.20	
PB52	VRF21	Vibration suppression control 2 - Vibration frequency	20	[Hz]
PB53	VRF22	Vibration suppression control 2 - Resonance frequency	20	[Hz]
PB54	VRF23	Vibration suppression control 2 - Vibration frequency damping	0.10	
PB55	VRF24	Vibration suppression control 2 - Resonance frequency damping	0.10	
PB29	GD2B	Load to motor inertia ratio after gain switching	10.00	[Multiplier]
PB60	PG1B	Model loop gain after gain switching	50	[rad/s]
PB30	PG2B	Position loop gain after gain switching	84	[rad/s]
PB31	VG2B	Speed loop gain after gain switching	4000	[rad/s]
PB32	VICB	Speed integral compensation after gain switching	50	[ms]
PB26	CDP	Gain switching function	0001 (Switch by control command from the controller.)	
PB28	CDT	Gain switching time constant	100	[ms]
PB33	VRF11B	Vibration suppression control 1 - Vibration frequency after gain switching	60	[Hz]
PB34	VRF12B	Vibration suppression control 1 - Resonance frequency after gain switching	60	[Hz]
PB35	VRF13B	Vibration suppression control 1 - Vibration frequency damping after gain switching	0.15	
PB36	VRF14B	Vibration suppression control 1 - Resonance frequency damping after gain switching	0.15	
PB56	VRF21B	Vibration suppression control 2 - Vibration frequency after gain switching	30	[Hz]
PB57	VRF22B	Vibration suppression control 2 - Resonance frequency after gain switching	30	[Hz]
PB58	VRF23B	Vibration suppression control 2 - Vibration frequency damping after gain switching	0.05	
PB59	VRF24B	Vibration suppression control 2 - Resonance frequency damping after gain switching	0.05	

(b) Switching timing chart

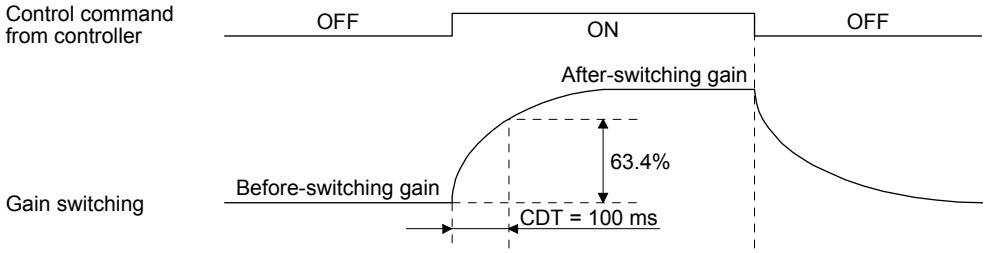

Model loop gain	100	→	50	→	100
Load to motor inertia ratio	4.00	→	10.00	→	4.00
Position loop gain	120	→	84	→	120
Speed loop gain	3000	→	4000	→	3000
Speed integral compensation	20	→	50	→	20
Vibration suppression control 1 - Vibration frequency	50	→	60	→	50
Vibration suppression control 1 - Resonance frequency	50	→	60	→	50
Vibration suppression control 1 - Vibration frequency damping	0.20	→	0.15	→	0.20
Vibration suppression control 1 - Resonance frequency damping	0.20	→	0.15	→	0.20
Vibration suppression control 2 - Vibration frequency	20	→	30	→	20
Vibration suppression control 2 - Resonance frequency	20	→	30	→	20
Vibration suppression control 2 - Vibration frequency damping	0.10	→	0.05	→	0.10
Vibration suppression control 2 - Resonance frequency damping	0.10	→	0.05	→	0.10

(2) When you choose switching by droop pulses

In this case, the vibration suppression control after gain switching and model loop gain after gain switching cannot be used.

(a) Setting example

Parameter	Symbol	Name	Setting value	Unit
PB06	GD2	Load to motor inertia ratio	4.00	[Multiplier]
PB08	PG2	Position loop gain	120	[rad/s]
PB09	VG2	Speed loop gain	3000	[rad/s]
PB10	VIC	Speed integral compensation	20	[ms]
PB29	GD2B	Load to motor inertia ratio after gain switching	10.00	[Multiplier]
PB30	PG2B	Position loop gain after gain switching	84	[rad/s]
PB31	VG2B	Speed loop gain after gain switching	4000	[rad/s]
PB32	VICB	Speed integral compensation after gain switching	50	[ms]
PB26	CDP	Gain switching selection	0003 (switching by droop pulses)	
PB27	CDL	Gain switching condition	50	[pulse]
PB28	CDT	Gain switching time constant	100	[ms]

(b) Switching timing chart

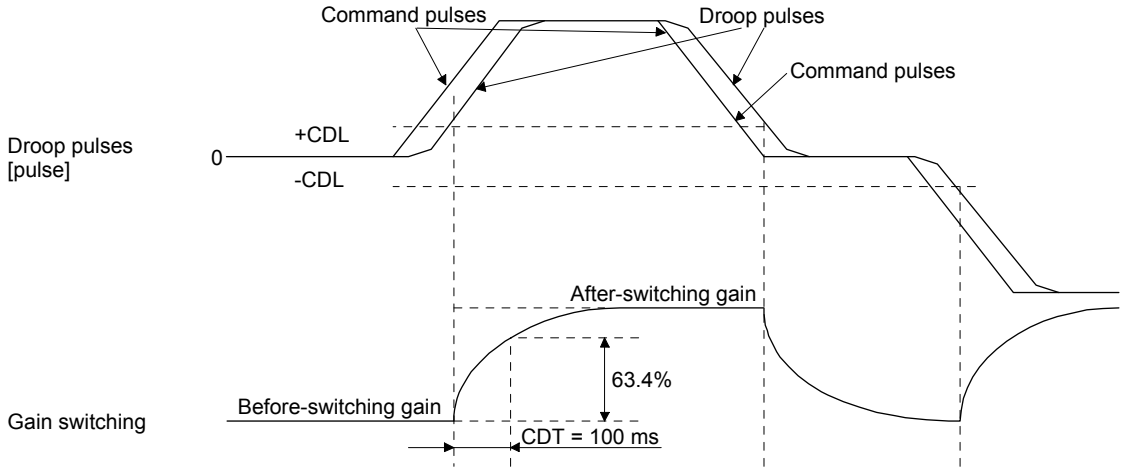

Load to motor inertia ratio	4.00	→	10.00	→	4.00	→	10.00
Position loop gain	120	→	84	→	120	→	84
Speed loop gain	3000	→	4000	→	3000	→	4000
Speed integral compensation	20	→	50	→	20	→	50

(3) When the gain switching time constant is disabled

(a) Gain switching time constant disabled was selected.

The gain switching time constant is disabled with this setting. The time constant is enabled at gain return.

The following example shows for [Pr. PB26 (CDP)] = 0103, [Pr. PB27 (CDL)] = 100 [pulse], and [Pr. PB28 (CDT)] = 100 [ms].

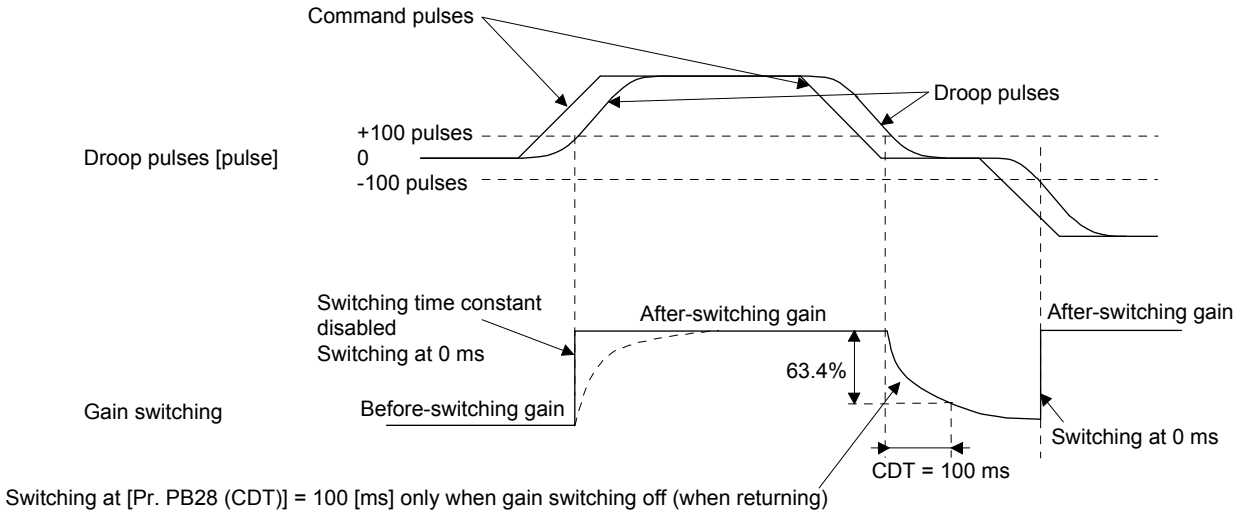

(b) Gain return time constant disabled was selected.
The gain switching time constant is enabled with this setting. The time constant is disabled at gain return.
The following example shows for [Pr. PB26 (CDP)] = 0201, [Pr. PB27 (CDL)] = 0, and [Pr. PB28 (CDT)] = 100 [ms].

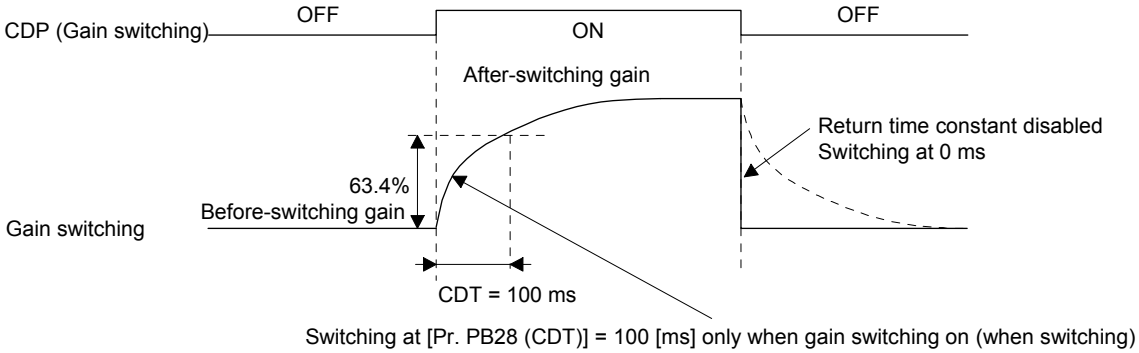

7.3 Tough drive function

POINT
●Enable or disable the tough drive function with [Pr. PA20 Tough drive setting]. (Refer to section 5.2.1.)

This function makes the equipment continue operating even under the condition that an alarm occurs. The tough drive function includes two types: the vibration tough drive and the instantaneous power failure tough drive.

7.3.1 Vibration tough drive function

This function prevents vibration by resetting a filter instantaneously when machine resonance occurs due to varied vibration frequency caused by machine aging.
To reset the machine resonance suppression filters with the function, [Pr. PB13 Machine resonance suppression filter 1] and [Pr. PB15 Machine resonance suppression filter 2] should be set in advance.
Set [Pr. PB13] and [Pr. PB15] as follows.

(1) One-touch tuning execution (section 6.2)

(2) Manual setting (section 5.2.2)

The vibration tough drive function operates when a detected machine resonance frequency is within ±30% for a value set in [Pr. PB13 Machine resonance suppression filter 1] or [Pr. PB15 Machine resonance suppression filter 2].
To set a detection level of the function, set sensitivity in [Pr. PF23 Vibration tough drive - Oscillation detection level].

POINT
●Resetting [Pr. PB13] and [Pr. PB15] by the vibration tough drive function is performed constantly. However, the number of write times to the EEPROM is limited to once per hour. ●The vibration tough drive function does not reset [Pr. PB46 Machine resonance suppression filter 3], [Pr. PB48 Machine resonance suppression filter 4], and [Pr. PB50 Machine resonance suppression filter 5]. ●The vibration tough drive function does not detect a vibration of 100 Hz or lower.

The following shows the function block diagram of the vibration tough drive function.
The function detects machine resonance frequency and compares it with [Pr. PB13] and [Pr. PB15], and resets a machine resonance frequency of a parameter whose set value is closer.

Filter	Setting parameter	Precaution	Parameter that is reset with vibration tough drive function
Machine resonance suppression filter 1	PB01/PB13/PB14	The filter can be set automatically with "Filter tuning mode selection" in [Pr. PB01].	PB13
Machine resonance suppression filter 2	PB15/PB16		PB15
Machine resonance suppression filter 3	PB46/PB47		
Machine resonance suppression filter 4	PB48/PB49	Enabling the machine resonance suppression filter 4 disables the shaft resonance suppression filter. Using the shaft resonance suppression filter is recommended because it is adjusted properly depending on the usage situation. The shaft resonance suppression filter is enabled for the initial setting.	
Machine resonance suppression filter 5	PB50/PB51	Enabling the robust filter disables the machine resonance suppression filter 5. The robust filter is disabled for the initial setting.	

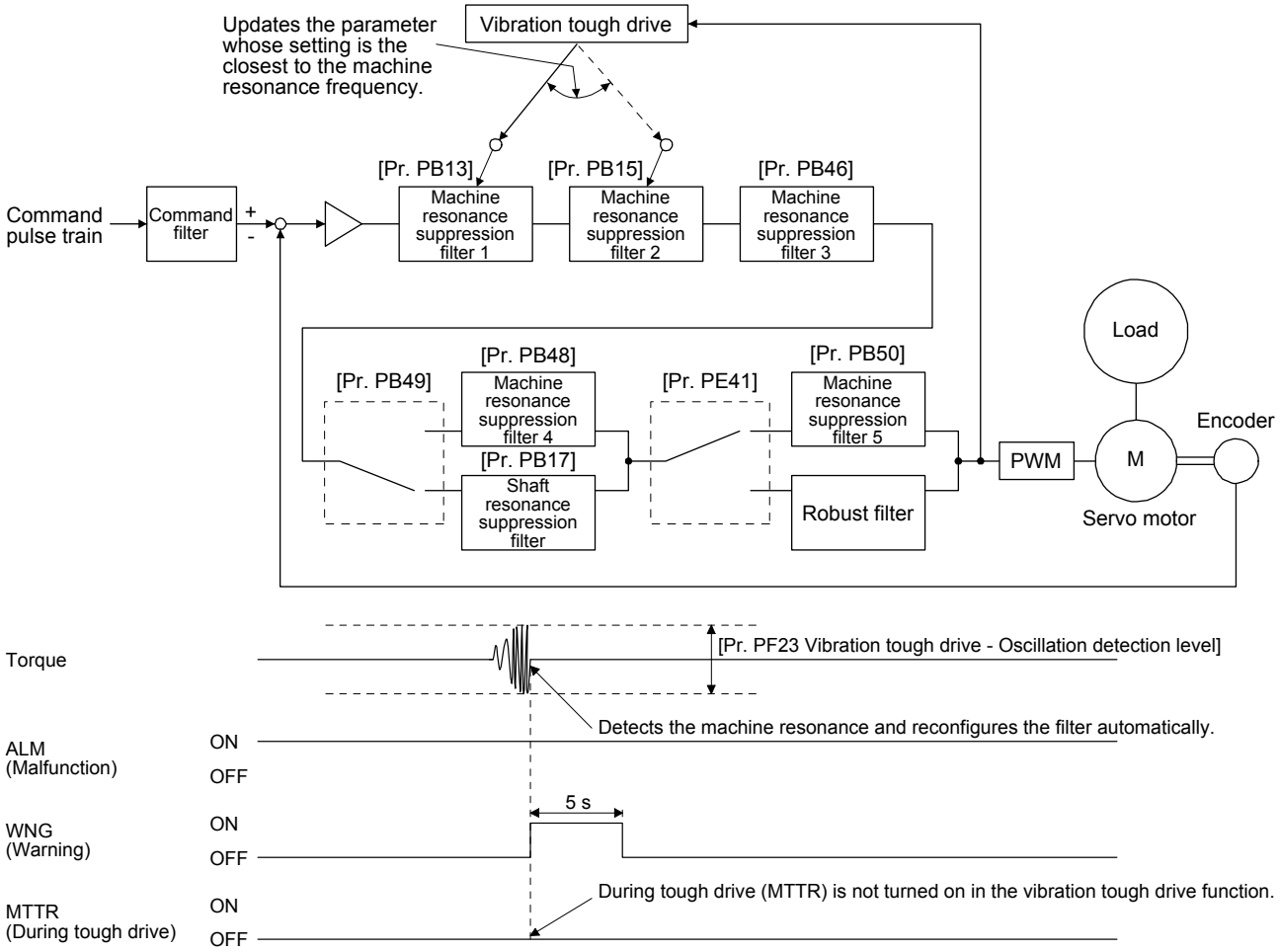

7.3.2 Instantaneous power failure tough drive function

The instantaneous power failure tough drive function avoids [AL. 10 Undervoltage] even when an instantaneous power failure occurs during operation. When the instantaneous power failure tough drive activates, the function will increase the tolerance against instantaneous power failures using the electrical energy charged in the capacitor in the servo amplifier and will change an alarm level of [AL. 10 Undervoltage] simultaneously. The [AL. 10.1 Voltage drop in the power] detection time for the power supply can be changed by [Pr. PF25 Instantaneous power failure tough drive - Detection time].

POINT

- MBR (Electromagnetic brake interlock) will not turn off during the instantaneous power failure tough drive.
- Selecting "Enabled (_ _ _ 1)" for "Torque limit function selection at instantaneous power failure" in [Pr. PA26] will limit torques to save electric energy when an instantaneous power failure occurs during operation and will make [AL. 10 Undervoltage] less likely to occur.
- When the load of instantaneous power failure is large, the undervoltage alarm ([AL. 10.2]) caused by the bus voltage drop may occur regardless of the set value of [Pr. PF25 Instantaneous power failure tough drive - Detection time].

(1) Instantaneous power failure time > [Pr. PF25 Instantaneous power failure tough drive - Detection time]
The alarm occurs when the instantaneous power failure time exceeds [Pr. PF25 Instantaneous power failure tough drive - Detection time].
MTTR (During tough drive) turns on after the instantaneous power failure is detected.
MBR (Electromagnetic brake interlock) turns off when the alarm occurs.

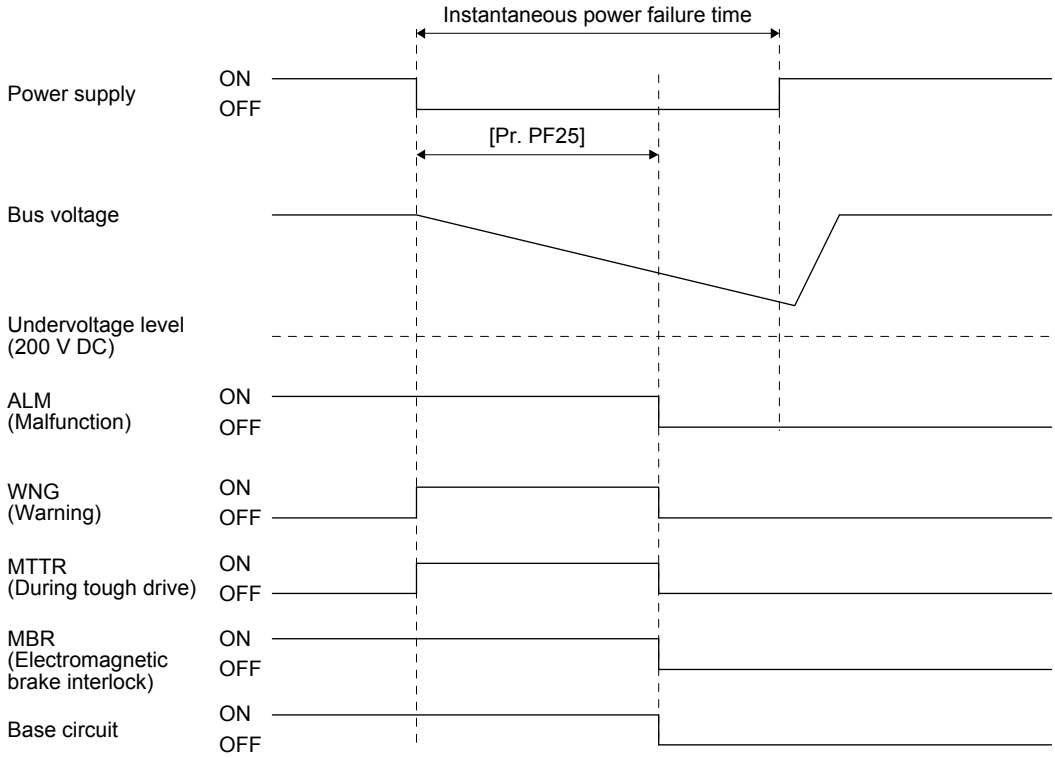

(2) Instantaneous power failure time < [Pr. PF25 Instantaneous power failure tough drive - Detection time]
Operation status differs depending on how bus voltage decreases.

(a) When the bus voltage decreases to 200 V DC or lower within the instantaneous power failure time [AL. 10 Undervoltage] occurs when the bus voltage decreases to the undervoltage level or lower regardless of the enabled instantaneous power failure tough drive.

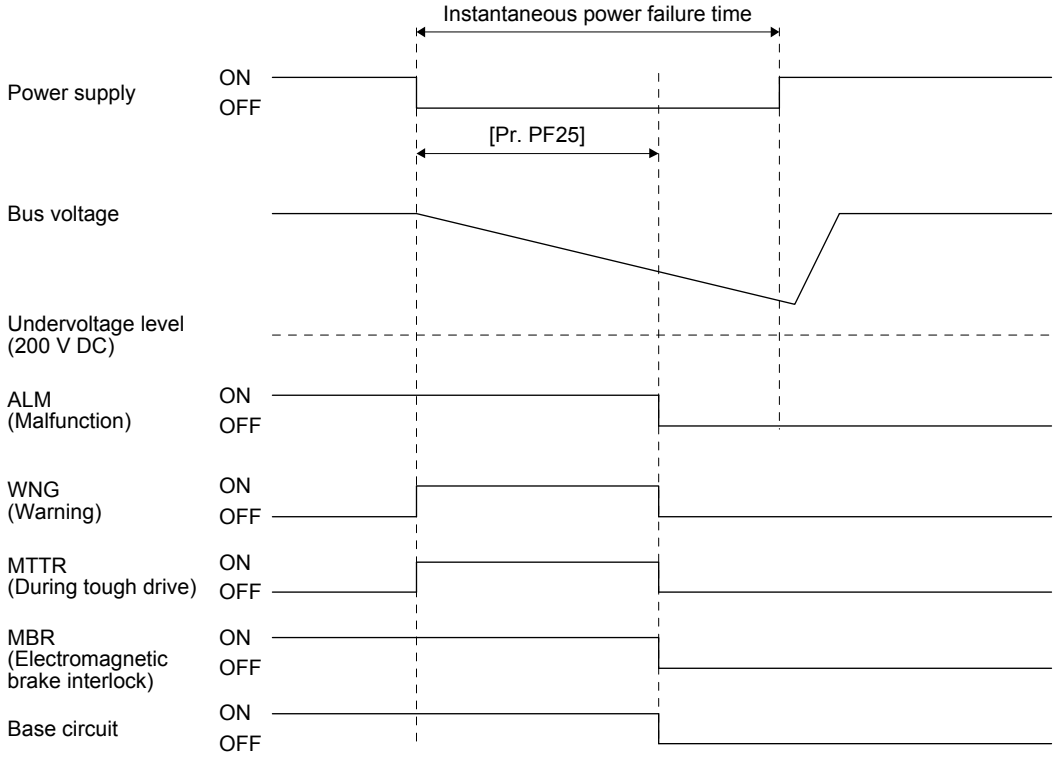

(b) When the bus voltage does not decrease to 200 V DC or lower within the instantaneous power failure time
The operation continues without alarming.

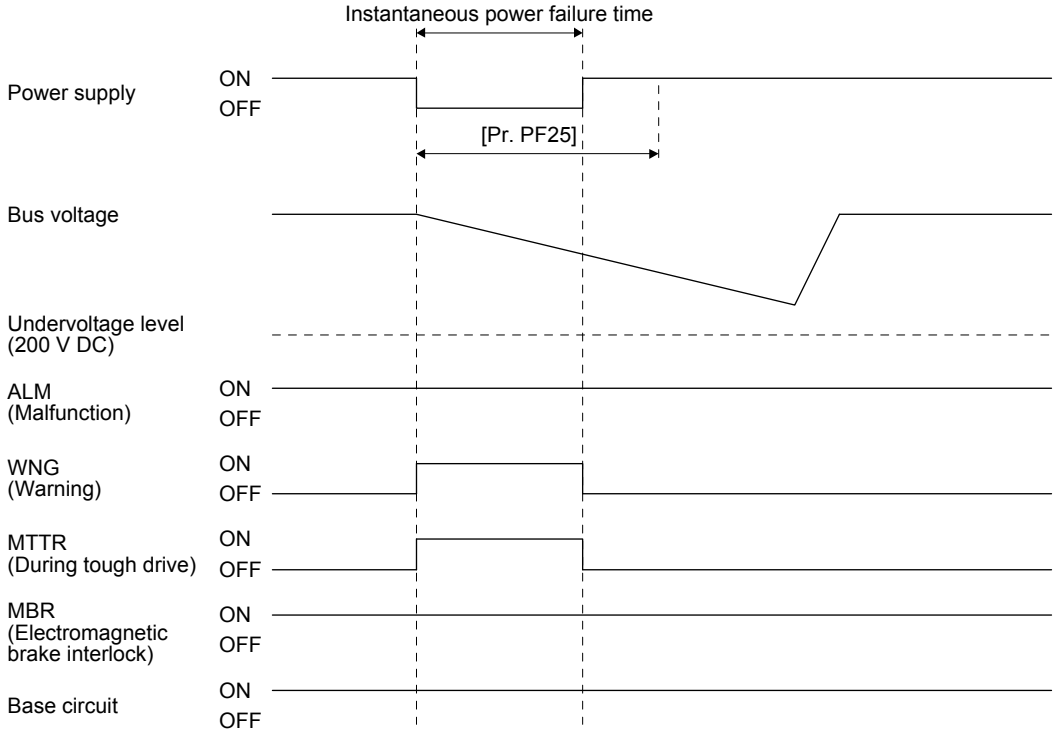

7.4 Model adaptive control disabled

POINT

- Change the parameters while the servo motor stops.
- When setting auto tuning response ([Pr. PA09]), change the setting value one by one to adjust it while checking operation status of the servo motor.

(1) Summary

The servo amplifier has a model adaptive control. The servo amplifier has a virtual motor model and drives the servo motor following the output of the motor model in the model adaptive control. At model adaptive control disabled, the servo amplifier drives the motor with PID control without using the model adaptive control.

The following shows the available parameters at model adaptive control disabled.

Parameter	Symbol	Name
PB08	PG2	Position loop gain
PB09	VG2	Speed loop gain
PB10	VIC	Speed integral compensation

(2) Parameter setting

Set [Pr. PB25] to "_ _ _ 2".

(3) Restrictions

The following functions are not available at model adaptive control disabled.

Function	Explanation
Forced stop deceleration function ([Pr. PA04])	Disabling the model adaptive control while the forced stop deceleration function is enabled, [AL. 37] will occur. The forced stop deceleration function is enabled at factory setting. Set [Pr. PA04] to "0 _ _ _" (Forced stop deceleration function disabled).
Vibration suppression control 1 ([Pr. PB02]/[Pr. PB19]/[Pr. PB20]) Vibration suppression control 2 ([Pr. PB02]/[Pr. PB52]/[Pr. PB53])	The vibration suppression control uses the model adaptive control. Disabling the model adaptive control will also disable the vibration suppression control.
Overshoot amount compensation ([Pr. PB12])	The overshoot amount compensation uses data used by the model adaptive control. Disabling the model adaptive control will also disable the overshoot amount compensation.

7.5 Lost motion compensation function

POINT
●The lost motion compensation function is enabled only in the position control mode.

The lost motion compensation function corrects response delays (caused by a non-sensitive band due to friction, twist, expansion, and backlash) caused when the machine travel direction is reversed. This function contributes to improvement for protrusions that occur at a quadrant change and streaks that occur at a quadrant change during circular cutting.
This function is effective when a high follow-up performance is required such as drawing an arc with an X-Y table.

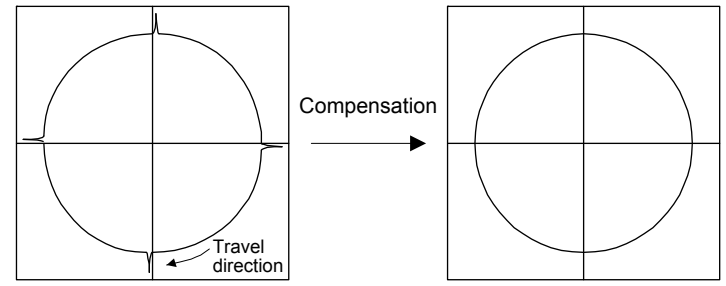

The locus before compensation　　The locus after compensation

(1) Parameter setting
Setting [Pr. PE44] to [Pr. PE50] enables the lost motion compensation function.

(a) Lost motion compensation function selection ([Pr. PE48])
Select the lost motion compensation function.

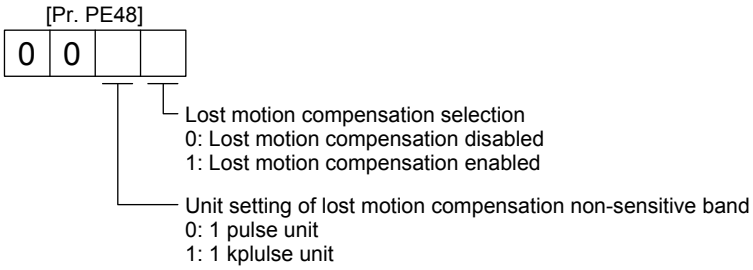

(b) Lost motion compensation ([Pr. PE44]/[Pr. PE45])
Set the same value for the lost motion compensation for each of when the forward rotation switches to the reverse rotation and when the reverse rotation switches to the forward rotation. When the heights of protrusions differ depending on the travel direction, set the different compensation for each travel direction. Set a value twice the usual friction torque and adjust the value while checking protrusions.

(c) Torque offset ([Pr. PE47])
For a vertical axis, unbalanced torque occurs due to the gravity. Although setting the torque offset is usually unnecessary, setting unbalanced torque of a machine as a torque offset cancels the unbalanced torque. The torque offset does not need to be set for a machine not generating unbalanced torque.

(d) Lost motion compensation timing ([Pr. PE49])
You can set the delay time of the lost motion compensation start timing with this parameter. When a protrusion occurs belatedly, set the lost motion compensation timing corresponding to the protrusion occurrence timing.

(e) Lost motion compensation non-sensitive band ([Pr. PE50])
When the travel direction reverses frequently around the zero speed, unnecessary lost motion compensation is triggered by the travel direction switching. By setting the lost motion compensation non-sensitive band, the travel direction switching due to position droop vibration with the setting value or lower is recognized as the zero speed. This prevents unnecessary lost motion compensation.
When the value of this parameter is changed, the compensation timing is changed. Adjust the value of Lost motion compensation timing ([Pr. PE49]).

(f) Lost motion filter setting ([Pr. PE46])
Changing the value of this parameter is usually unnecessary. When a value other than 0.0 [ms] is set in this parameter, the high-pass filter output value of the set time constant is applied to the compensation and lost motion compensation continues.

(2) Adjustment procedure of the lost motion compensation function
The following shows the adjustment procedure of the lost motion compensation function.

(a) Measuring the load current
Measure the load currents during the forward direction feed and reverse direction feed with MR Configurator2.

(b) Setting the lost motion compensation
Calculate the friction torque from the measurement result of (a) and set a value twice the friction torque in [Pr. PE44] and [Pr. PE45] as lost motion compensation.

$$\text{Friction torque [\%]} = \frac{\left|(\text{load current during feed in the forward rotation direction [\%]}) - (\text{load current during feed in the reverse rotation direction [\%]})\right|}{2}$$

(c) Checking protrusions
Drive the servo motor and check that the protrusions are corrected.

(d) Adjusting the lost motion compensation

When protrusions still occur, the compensation is insufficient. Increase the lost motion compensation by approximately 0.5% until the protrusions are eliminated. When notches occur, the compensation is excessive. Decrease the lost motion compensation by approximately 0.5% until the notches are eliminated. Different values can be set as the compensation for each of when the forward rotation (CCW) switches to the reverse rotation (CW) and when the reverse rotation (CW) switches to the forward rotation (CCW).

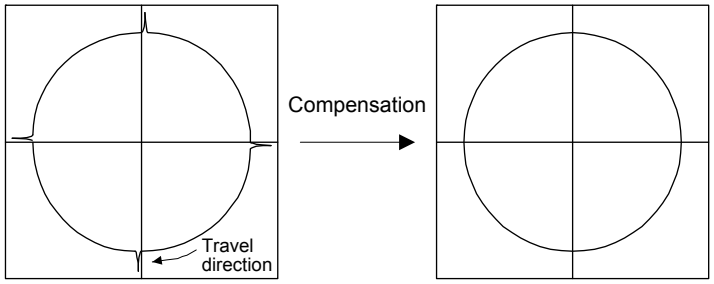

The locus before compensation　　The locus after compensation

(e) Adjusting the lost motion compensation timing

When the machine has low rigidity, the speed loop gain is set lower than the standard setting value, or the servo motor is rotating at high speed, quadrant projections may occur behind the quadrant change points. In this case, you can suppress the quadrant projections by delaying the lost motion compensation timing with [Pr. PE49 Lost motion compensation timing]. Increase the setting value of [Pr. PE49] from 0 by approximately 0.5 ms to adjust the compensation timing.

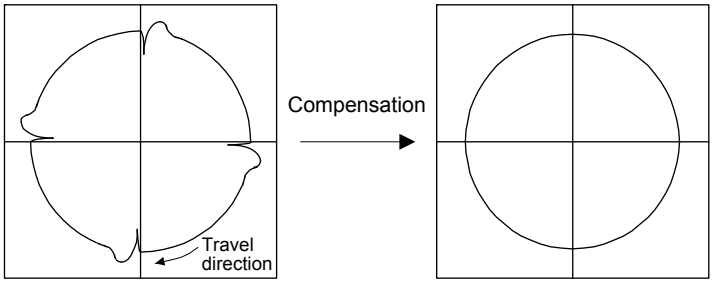

Before timing delay compensation　　After timing delay compensation

(f) Adjusting the lost motion compensation non-sensitive band

When the lost motion is compensated twice around a quadrant change point, set [Pr. PE50 Lost motion compensation non-sensitive band]. Increase the setting value so that the lost motion is not compensated twice. Setting [Pr. PE50] may changes the compensation timing. Adjust the lost motion compensation timing of (e).

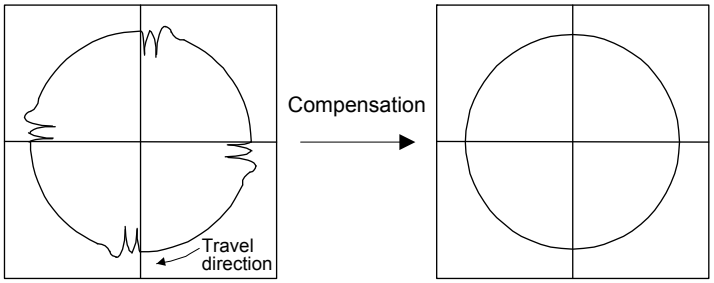

Before timing delay compensation　　After timing delay compensation

MEMO

8. TROUBLESHOOTING

POINT
●Refer to "MELSERVO-JE Servo Amplifier Instruction Manual (Troubleshooting)" for details of alarms and warnings. ●As soon as an alarm occurs, make the Servo-off status and interrupt the power. ●[AL. 37 Parameter error] and warnings (except [AL. F0 Tough drive warning]) are not recorded in the alarm history.

When an error occurs during operation, the corresponding alarm or warning is displayed. When the alarm occurs, refer to "MELSERVO-JE Servo Amplifier Instruction Manual (Troubleshooting)" to remove the failure. When an alarm occurs, ALM (Malfunction) will turn off.

8.1 Explanation for the lists

(1) No./Name/Detail number/Detail name
Indicates the number, name, detail number, detail name of alarms or warnings.

(2) Stop method
For the alarms and warnings in which "SD" is written in the stop method column, the servo motor stops with the dynamic brake after forced stop deceleration. For the alarms and warnings written "DB" or "EDB" in the stop method column, the servo motor stops with the dynamic brake without forced stop deceleration.

(3) Alarm deactivation
After its cause has been removed, the alarm can be deactivated in any of the methods marked ○ in the alarm deactivation column. Warnings are automatically canceled after the cause of occurrence is removed. Alarms are deactivated with alarm reset, CPU reset, or power cycling.

Alarm deactivation	Explanation
Alarm reset	1. Error reset command from the controller 2. Push the "Occurring Alarm Reset" button in the "Alarm Display" window of MR Configurator2.
CPU reset	Reset the controller itself.
Power cycling	Turn off the power, check that the 3-digit, 7-segment LED display is off, and then turn on the power.

8.2 Alarm list

	No.	Name	Detail number	Detail name	Stop method (Note 2, 3)	Alarm deactivation		
						Alarm reset	CPU reset	Power cycling
Alarm	10	Undervoltage	10.1	Voltage drop in the power	EDB	○	○	○
			10.2	Bus voltage drop	SD	○	○	○
	12	Memory error 1 (RAM)	12.1	RAM error 1	DB			○
			12.2	RAM error 2	DB			○
			12.3	RAM error 3	DB			○
			12.4	RAM error 4	DB			○
			12.5	RAM error 5	DB			○
	13	Clock error	13.1	Clock error 1	DB			○
			13.2	Clock error 2	DB			○
	14	Control process error	14.1	Control process error 1	DB			○
			14.2	Control process error 2	DB			○
			14.3	Control process error 3	DB			○
			14.4	Control process error 4	DB			○
			14.5	Control process error 5	DB			○
			14.6	Control process error 6	DB			○
			14.7	Control process error 7	DB			○
			14.8	Control process error 8	DB			○
			14.9	Control process error 9	DB			○
			14.A	Control process error 10	DB			○
	15	Memory error 2 (EEP-ROM)	15.1	EEP-ROM error at power on	DB			○
			15.2	EEP-ROM error during operation	DB			○
	16	Encoder initial communication error 1	16.1	Encoder initial communication - Receive data error 1	DB			○
			16.2	Encoder initial communication - Receive data error 2	DB			○
			16.3	Encoder initial communication - Receive data error 3	DB			○
			16.5	Encoder initial communication - Transmission data error 1	DB			○
			16.6	Encoder initial communication - Transmission data error 2	DB			○
			16.7	Encoder initial communication - Transmission data error 3	DB			○
			16.A	Encoder initial communication - Process error 1	DB			○
			16.B	Encoder initial communication - Process error 2	DB			○
			16.C	Encoder initial communication - Process error 3	DB			○
			16.D	Encoder initial communication - Process error 4	DB			○
			16.E	Encoder initial communication - Process error 5	DB			○
			16.F	Encoder initial communication - Process error 6	DB			○
	17	Board error	17.1	Board error 1	DB			○
			17.3	Board error 2	DB			○
			17.4	Board error 3	DB			○
			17.5	Board error 4	DB			○
			17.6	Board error 5	DB			○
	19	Memory error 3 (FLASH-ROM)	19.1	FLASH-ROM error 1	DB			○
			19.2	FLASH-ROM error 2	DB			○
	1A	Servo motor combination error	1A.1	Servo motor combination error 1	DB			○
	1E	Encoder initial communication error 2	1E.1	Encoder malfunction	DB			○
	1F	Encoder initial communication error 3	1F.1	Incompatible encoder	DB			○

	No.	Name	Detail number	Detail name	Stop method (Note 2, 3)	Alarm deactivation		
						Alarm reset	CPU reset	Power cycling
Alarm	20	Encoder normal communication error 1	20.1	Encoder normal communication - Receive data error 1	EDB			○
			20.2	Encoder normal communication - Receive data error 2	EDB			○
			20.3	Encoder normal communication - Receive data error 3	EDB			○
			20.5	Encoder normal communication - Transmission data error 1	EDB			○
			20.6	Encoder normal communication - Transmission data error 2	EDB			○
			20.7	Encoder normal communication - Transmission data error 3	EDB			○
			20.9	Encoder normal communication - Receive data error 4	EDB			○
			20.A	Encoder normal communication - Receive data error 5	EDB			○
	21	Encoder normal communication error 2	21.1	Encoder data error 1	EDB			○
			21.2	Encoder data update error	EDB			○
			21.3	Encoder data waveform error	EDB			○
			21.5	Encoder hardware error 1	EDB			○
			21.6	Encoder hardware error 2	EDB			○
			21.9	Encoder data error 2	EDB			○
	24	Main circuit error	24.1	Ground fault detected at hardware detection circuit	DB			○
			24.2	Ground fault detected by software detection function	DB	○	○	○
	25	Absolute position erased	25.1	Servo motor encoder - Absolute position erased	DB			○
	30	Regenerative error	30.1	Regeneration heat error	DB	○ (Note 1)	○ (Note 1)	○ (Note 1)
			30.2	Regeneration signal error	DB	○ (Note 1)	○ (Note 1)	○ (Note 1)
			30.3	Regeneration feedback signal error	DB	○ (Note 1)	○ (Note 1)	○ (Note 1)
	31	Overspeed	31.1	Abnormal motor speed	SD	○	○	○
	32	Overcurrent	32.1	Overcurrent detected at hardware detection circuit (during operation)	DB			○
			32.2	Overcurrent detected at software detection function (during operation)	DB	○	○	○
			32.3	Overcurrent detected at hardware detection circuit (during a stop)	DB			○
			32.4	Overcurrent detected at software detection function (during a stop)	DB	○	○	○
	33	Overvoltage	33.1	Main circuit voltage error	EDB	○	○	○
	34	SSCNET receive error 1	34.1	SSCNET receive data error	SD	○	○ (Note 4)	○
			34.2	SSCNET connector connection error	SD	○	○	○
			34.3	SSCNET communication data error	SD	○	○	○
			34.4	Hardware error signal detection	SD	○	○	○
	35	Command frequency error	35.1	Command frequency error	SD	○	○	○
	36	SSCNET receive error 2	36.1	Continuous communication data error	SD	○	○	○
	37	Parameter error	37.1	Parameter setting range error	DB		○	○
			37.2	Parameter combination error	DB		○	○
	3E	Operation mode error	3E.1	Operation mode error	DB			○
	45	Main circuit device overheat	45.1	Main circuit device overheat error 1	SD	○ (Note 1)	○ (Note 1)	○ (Note 1)

	No.	Name	Detail number	Detail name	Stop method (Note 2, 3)	Alarm deactivation		
						Alarm reset	CPU reset	Power cycling
Alarm	46	Servo motor overheat	46.1	Abnormal temperature of servo motor 1	SD	○ (Note 1)	○ (Note 1)	○ (Note 1)
			46.5	Abnormal temperature of servo motor 3	DB	○ (Note 1)	○ (Note 1)	○ (Note 1)
			46.6	Abnormal temperature of servo motor 4	DB	○ (Note 1)	○ (Note 1)	○ (Note 1)
	47	Cooling fan error	47.2	Cooling fan speed reduction error	SD			○
	50	Overload 1	50.1	Thermal overload error 1 during operation	SD	○ (Note 1)	○ (Note 1)	○ (Note 1)
			50.2	Thermal overload error 2 during operation	SD	○ (Note 1)	○ (Note 1)	○ (Note 1)
			50.3	Thermal overload error 4 during operation	SD	○ (Note 1)	○ (Note 1)	○ (Note 1)
			50.4	Thermal overload error 1 during a stop	SD	○ (Note 1)	○ (Note 1)	○ (Note 1)
			50.5	Thermal overload error 2 during a stop	SD	○ (Note 1)	○ (Note 1)	○ (Note 1)
			50.6	Thermal overload error 4 during a stop	SD	○ (Note 1)	○ (Note 1)	○ (Note 1)
	51	Overload 2	51.1	Thermal overload error 3 during operation	DB	○ (Note 1)	○ (Note 1)	○ (Note 1)
			51.2	Thermal overload error 3 during a stop	DB	○ (Note 1)	○ (Note 1)	○ (Note 1)
	52	Error excessive	52.1	Excess droop pulse 1	SD	○	○	○
			52.3	Excess droop pulse 2	SD	○	○	○
			52.4	Error excessive during 0 torque limit	SD	○	○	○
			52.5	Excess droop pulse 3	EDB	○	○	○
	54	Oscillation detection	54.1	Oscillation detection error	EDB	○	○	○
	56	Forced stop error	56.2	Over speed during forced stop	EDB	○	○	○
			56.3	Estimated distance over during forced stop	EDB	○	○	○
	8A	USB communication time-out error	8A.1	USB communication time-out error	SD	○	○	○
	8E	USB communication error/Serial communication error	8E.1	USB communication receive error/Serial communication receive error	SD	○	○	○
			8E.2	USB communication checksum error/Serial communication checksum error	SD	○	○	○
			8E.3	USB communication character error/Serial communication character error	SD	○	○	○
			8E.4	USB communication command error/Serial communication command error	SD	○	○	○
			8E.5	USB communication data number error/Serial communication data number error	SD	○	○	○
	888	Watchdog	88._	Watchdog	DB			○

Note 1. Leave the servo amplifier for about 30 minutes of cooling time after removing the cause of occurrence.

2. The following shows three stop methods of DB, EDB, and SD.
DB: Dynamic brake stop (A servo motor without the dynamic brake coasts.)
EDB: Electronic dynamic brake stop (available with specified servo motors)
Refer to the following table for the specified servo motors. The stop method for other than the specified servo motors will be DB.

Series	Servo motor
HG-KN	HG-KN053/HG-KN13/HG-KN23/HG-KN43
HG-SN	HG-SN52

SD: Forced stop deceleration

3. This is applicable when [Pr. PA04] is set to the initial value. The stop method of SD can be changed to DB using [Pr. PA04].

4. In some controller communication status, the alarm factor may not be removed.

8.3 Warning list

	No.	Name	Detail number	Detail name	Stop method (Note 2, 3)
Warning	91	Servo amplifier overheat warning (Note 1)	91.1	Main circuit device overheat warning	
	92	Battery cable disconnection warning	92.1	Encoder battery cable disconnection warning	
			92.3	Battery degradation	
	96	Home position setting warning	96.1	In-position warning at home positioning	
			96.2	Command input warning at home positioning	
	9B	Error excessive warning	9B.1	Excess droop pulse 1 warning	
			9B.3	Excess droop pulse 2 warning	
			9B.4	Error excessive warning during 0 torque limit	
	9F	Battery warning	9F.1	Low battery	
	E0	Excessive regeneration warning	E0.1	Excessive regeneration warning	
	E1	Overload warning 1	E1.1	Thermal overload warning 1 during operation	
			E1.2	Thermal overload warning 2 during operation	
			E1.3	Thermal overload warning 3 during operation	
			E1.4	Thermal overload warning 4 during operation	
			E1.5	Thermal overload warning 1 during a stop	
			E1.6	Thermal overload warning 2 during a stop	
			E1.7	Thermal overload warning 3 during a stop	
			E1.8	Thermal overload warning 4 during a stop	
	E3	Absolute position counter warning	E3.2	Absolute position counter warning	
			E3.5	Encoder absolute positioning counter warning	
	E4	Parameter warning	E4.1	Parameter setting range error warning	
	E6	Servo forced stop warning	E6.1	Forced stop warning	SD
	E7	Controller forced stop warning	E7.1	Controller forced stop warning	SD
	E8	Cooling fan speed reduction warning	E8.1	Decreased cooling fan speed warning	
	E9	Main circuit off warning	E9.1	Servo-on signal on during main circuit off	DB
			E9.2	Bus voltage drop during low speed operation	DB
			E9.3	Ready-on signal on during main circuit off	DB
	EC	Overload warning 2	EC.1	Overload warning 2	
	ED	Output watt excess warning	ED.1	Output watt excess warning	
	F0	Tough drive warning	F0.1	Instantaneous power failure tough drive warning	
			F0.3	Vibration tough drive warning	
	F2	Drive recorder - Miswriting warning	F2.1	Drive recorder - Area writing time-out warning	
			F2.2	Drive recorder - Data miswriting warning	
	F3	Oscillation detection warning	F3.1	Oscillation detection warning	

Note 1. Leave the servo amplifier for about 30 minutes of cooling time after removing the cause of occurrence.

2. The following shows two stop methods of DB and SD.
   - DB: Dynamic brake stop (A servo motor without the dynamic brake coasts.)
   - SD: Forced stop deceleration

3. This is applicable when [Pr. PA04] is set to the initial value. The stop method of SD can be changed to DB using [Pr. PA04].

9. DIMENSIONS

9.1 Servo amplifier

(1) MR-JE-10B to MR-JE-40B

[Unit: mm]

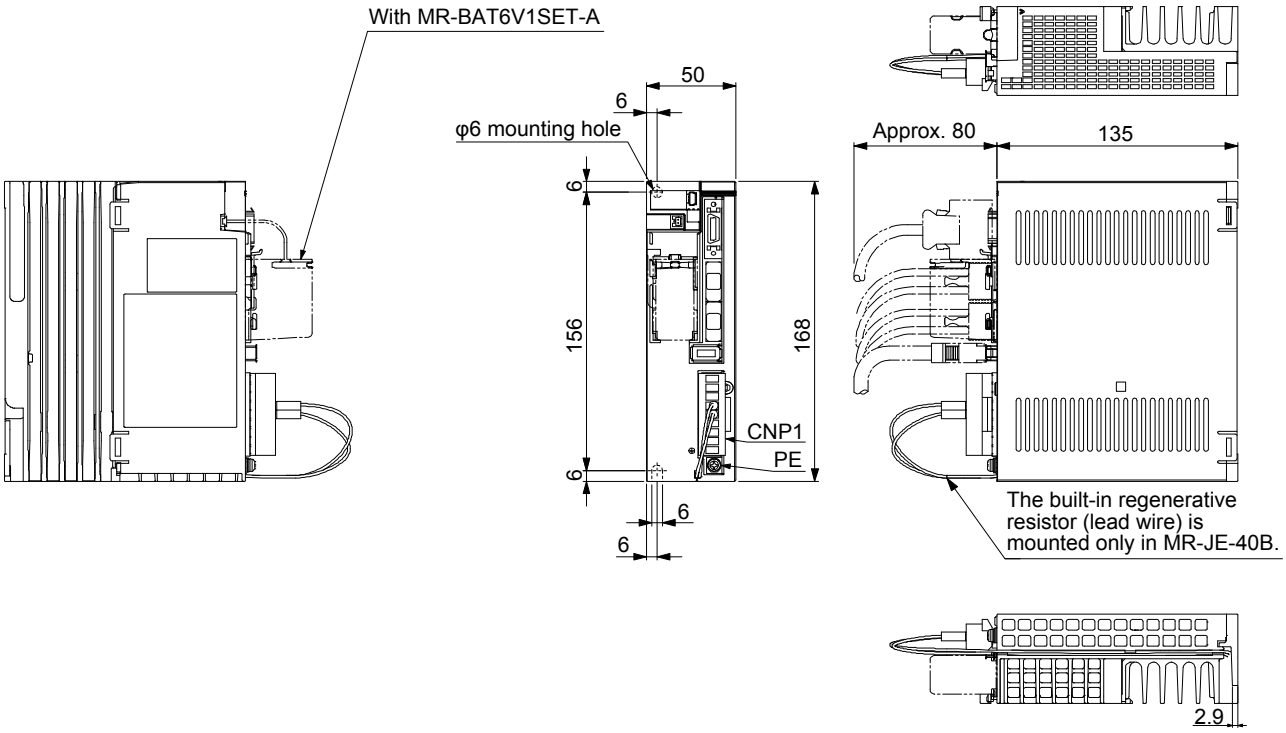

Mass: 0.8 [kg]

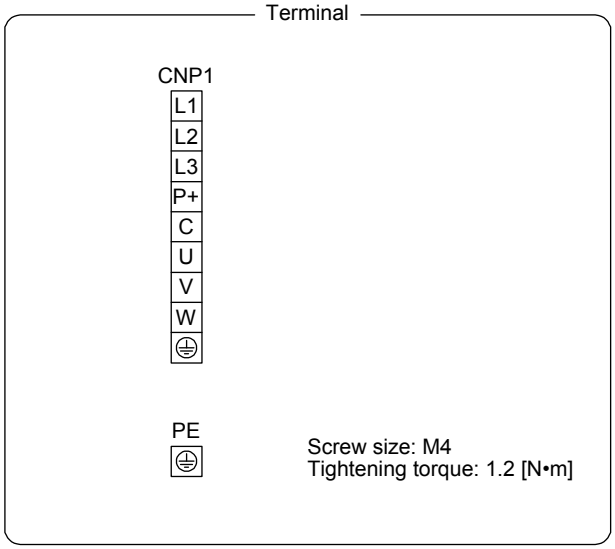

Mounting screw
Screw size: M5
Tightening torque: 3.24 [N•m]

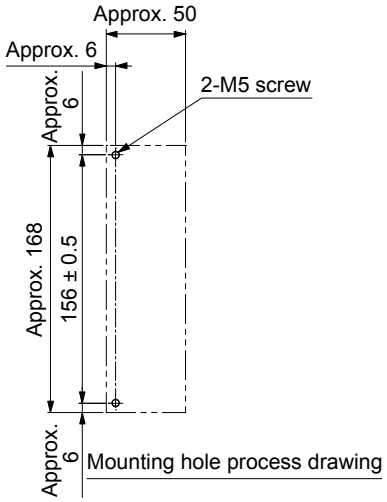

(2) MR-JE-70B and MR-JE-100B

[Unit: mm]

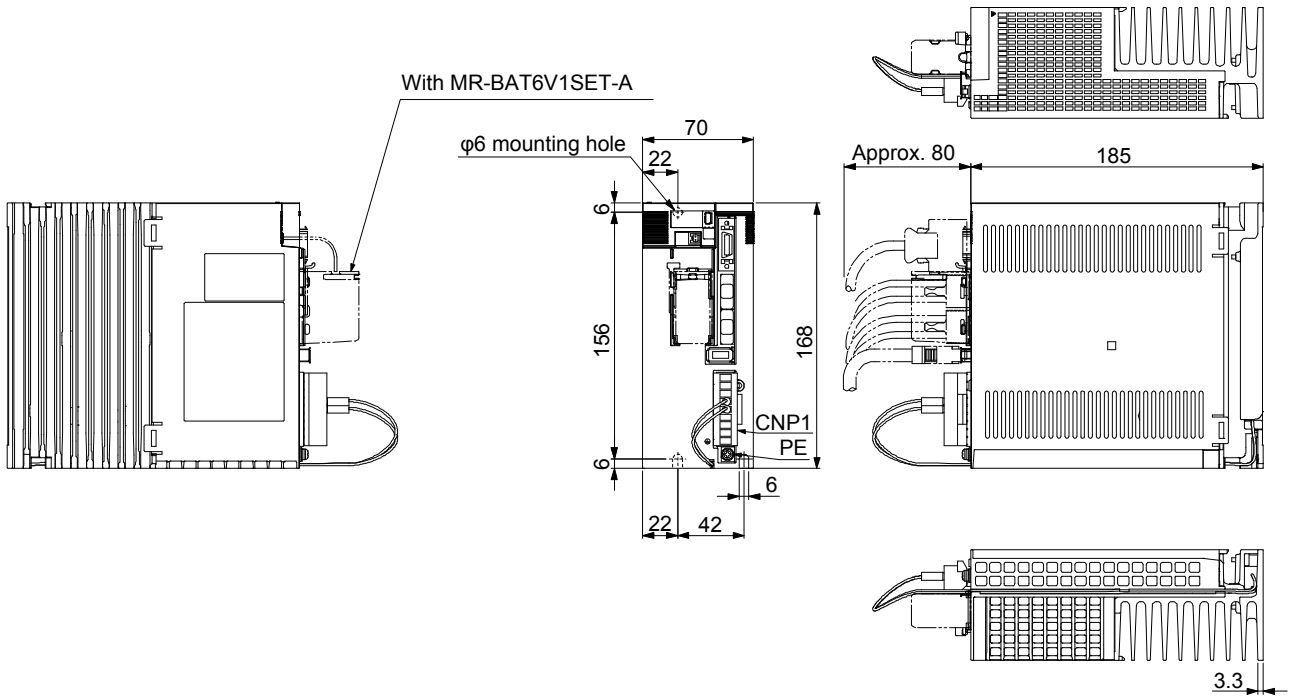

Mass: 1.5 [kg]

Mounting screw
Screw size: M5
Tightening torque: 3.24 [N•m]

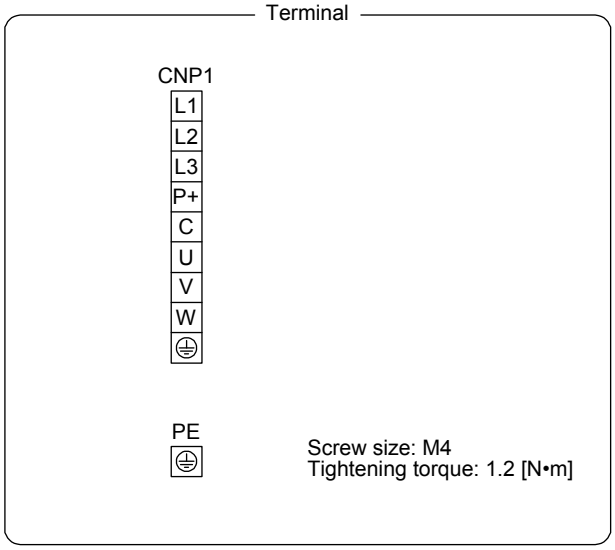

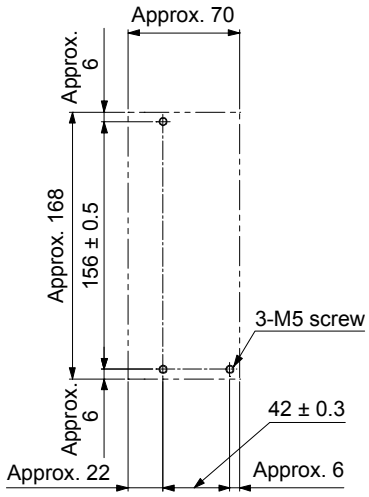

Mounting hole process drawing

(3) MR-JE-200B and MR-JE-300B

[Unit: mm]

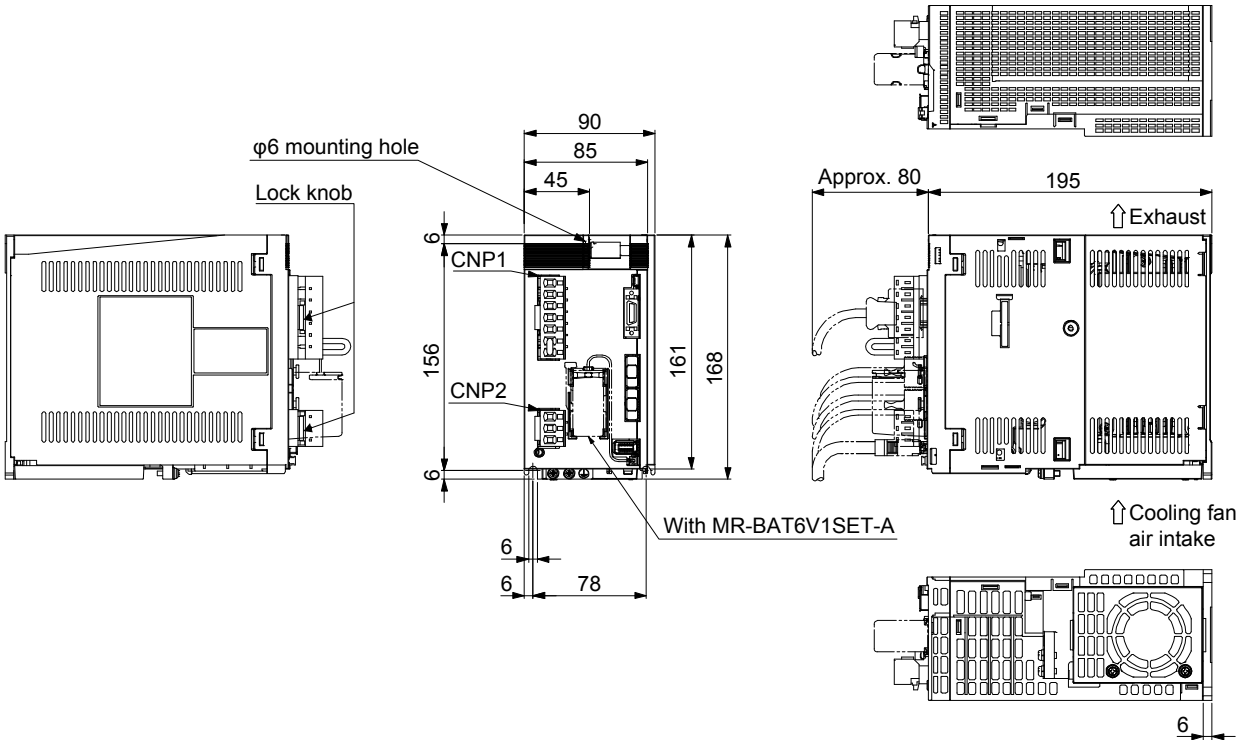

Mass: 2.1 [kg]

Mounting screw
Screw size: M5
Tightening torque: 3.24 [N•m]

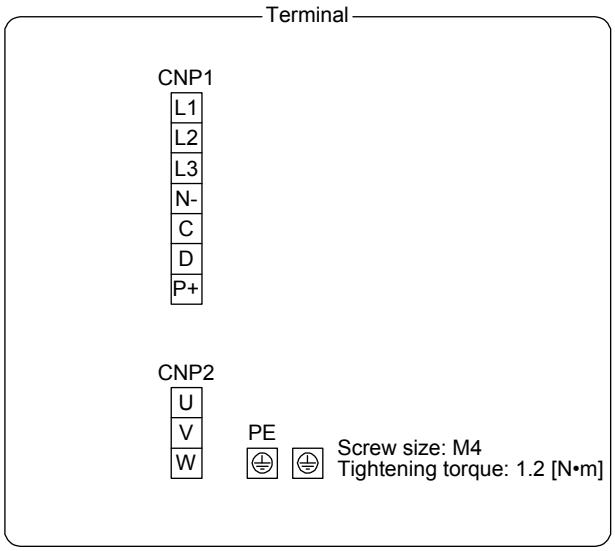

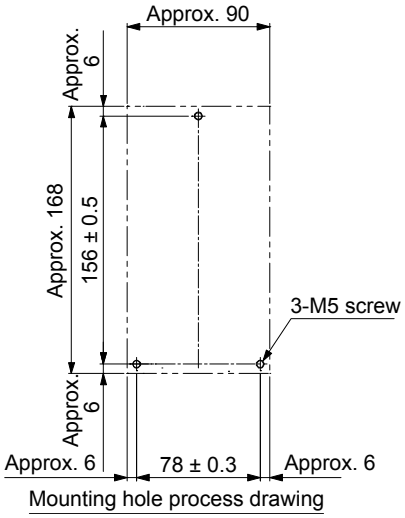

9.2 Connector

(1) CN1A/CN1B connector

[Unit: mm]

F0-PF2D103

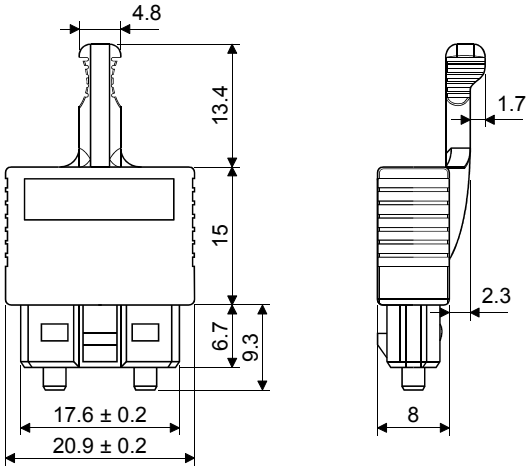

F0-CF2D103-S

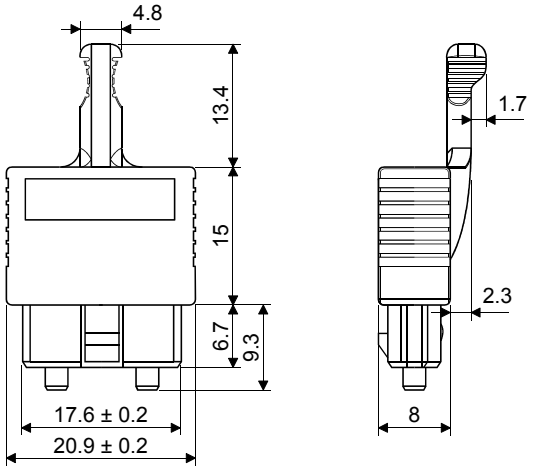

(2) SCR connector system (3M)
Receptacle: 36210-0100PL
Shell kit: 36310-3200-008

[Unit: mm]

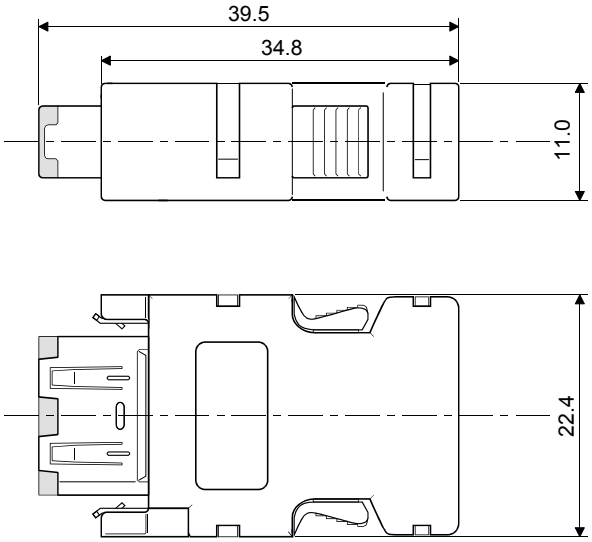

10. CHARACTERISTICS

10.1 Overload protection characteristics

An electronic thermal is built in the servo amplifier to protect the servo motor, servo amplifier and servo motor power wires from overloads.
[AL. 50 Overload 1] occurs if overload operation performed is above the electronic thermal protection curve shown in fig. 10.1. [AL. 51 Overload 2] occurs if the maximum current is applied continuously for several seconds due to machine collision, etc. Use the equipment on the left-side area of the continuous or broken line in the graph.
For the system where the unbalanced torque occurs, such as a vertical axis system, the unbalanced torque of the machine should be kept at 70% or lower of the motor's rated torque.
This servo amplifier has a servo motor overload protection. (The servo motor overload current (full load current) is set on the basis of 110% rated current of the servo amplifier.)

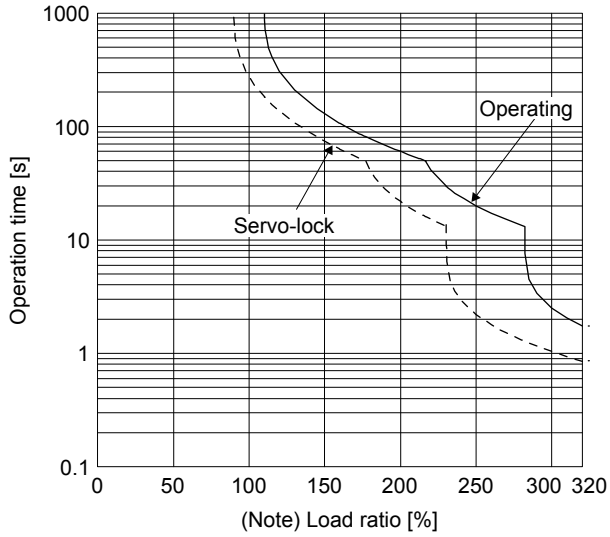

HG-KN13_

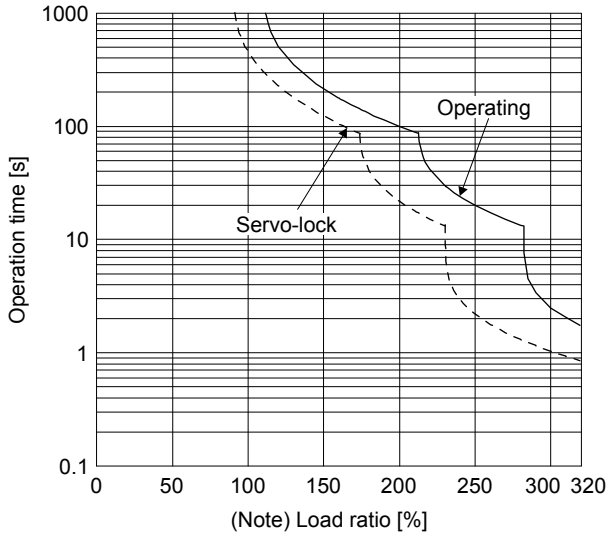

HG-KN23_/HG-KN43_/
HG-KN73_/HG-SN52_/
HG-SN102_

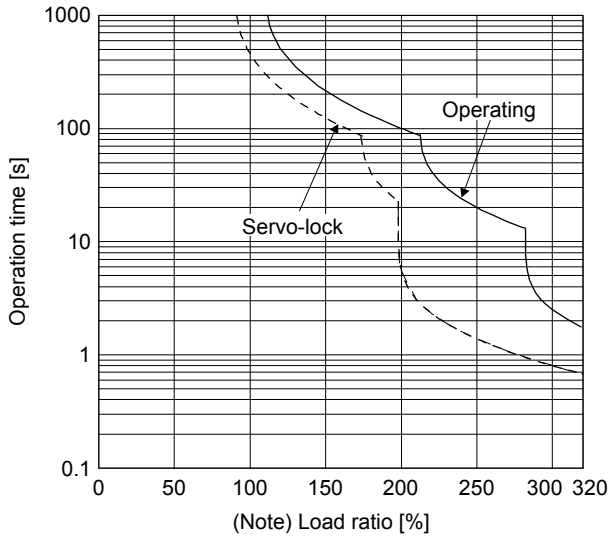

HG-SN152_/HG-SN202_/
HG-SN302_

Note. If operation that generates torque more than 100% of the rating is performed with an abnormally high frequency in a servo motor stop status (servo-lock status) or in a 30 r/min or lower low-speed operation status, the servo amplifier may malfunction regardless of the electronic thermal protection.

Fig. 10.1 Electronic thermal protection characteristics

10.2 Power supply capacity and generated loss

(1) Servo amplifier generated heat

Table 10.1 indicates servo amplifiers' power supply capacities and losses generated under rated load. For thermal design of an enclosed type cabinet, use the values in the table in consideration for the worst operating conditions. The actual amount of generated heat will be intermediate between values at rated torque and servo-off according to the duty used during operation. When the servo motor is run at less than the rated speed, the power supply capacity will be smaller than the value in the table, but the servo amplifier's generated heat will not change.

Table 10.1 Power supply capacity and generated loss per servo motor at rated output

Servo amplifier	Servo motor	(Note 1) Power supply capacity [kVA]	(Note 2) Servo amplifier-generated heat [W]		Area required for heat dissipation [m^2]
			At rated output	With servo-off	
MR-JE-10B	HG-KN13_	0.3	25	15	0.5
MR-JE-20B	HG-KN23_	0.5	25	15	0.5
MR-JE-40B	HG-KN43_	0.9	35	15	0.7
MR-JE-70B	HG-KN73_	1.3	50	15	1.0
	HG-SN52_	1.0	40	15	0.8
MR-JE-100B	HG-SN102_	1.7	50	15	1.0
MR-JE-200B	HG-SN152_	2.5	90	20	1.8
	HG-SN202_	3.5			
MR-JE-300B	HG-SN302_	4.8	120	20	2.4

Note 1. Note that the power supply capacity will vary according to the power supply impedance. This value is applicable when the power factor improving AC reactor is not used.

2. Heat generated during regeneration is not included in the servo amplifier-generated heat. To calculate heat generated by the regenerative option, refer to section 11.2.

(2) Heat dissipation area for an enclosed type cabinet

The enclosed type cabinet (hereafter called the cabinet) which will contain the servo amplifier should be designed to ensure that its temperature rise is within +10 ˚C at the ambient temperature of 40 ˚C. (With an approximately 5 ˚C safety margin, the system should operate within a maximum 55 ˚C limit.) The necessary cabinet heat dissipation area can be calculated by equation 10.1.

$$A = \frac{P}{K \cdot \Delta T} \quad \cdots\cdots (10.1)$$

A : Heat dissipation area [m^2]
P : Loss generated in the cabinet [W]
ΔT : Difference between internal and ambient temperatures [˚C]
K : Heat dissipation coefficient [5 to 6]

When calculating the heat dissipation area with equation 10.1, assume that P is the sum of all losses generated in the cabinet. Refer to table 10.1 for heat generated by the servo amplifier. "A" indicates the effective area for heat dissipation, but if the cabinet is directly installed on an insulated wall, that extra amount must be added to the cabinet's surface area. The required heat dissipation area will vary with the conditions in the cabinet. If convection in the cabinet is poor and heat builds up, effective heat dissipation will not be possible. Therefore, arrangement of the equipment in the cabinet and the use of a cooling fan should be considered. Table 10.1 lists the cabinet dissipation area for each servo amplifier (guideline) when the servo amplifier is operated at the ambient temperature of 40 ˚C under rated load.

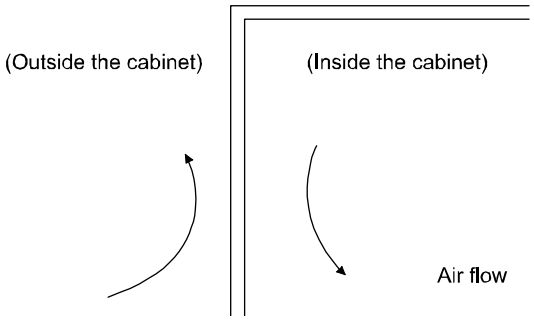

Fig. 10.2 Temperature distribution in an enclosed type cabinet

When air flows along the outer wall of the cabinet, effective heat exchange will be possible, because the temperature slope inside and outside the cabinet will be steeper.

10.3 Dynamic brake characteristics

POINT

- Do not use dynamic brake for stop in a normal operation as it is the function for stop in emergency.
- For a machine operating at the recommended load to motor inertia ratio or less, the estimated number of usage times of the dynamic brake is 1000 times while the machine decelerates from the rated speed to a stop once in 10 minutes.
- Be sure to enable EM1 (Forced stop 1) after servo motor stops when using EM1 (Forced stop 1) frequently in other than emergency.

10.3.1 Dynamic brake operation

(1) Calculation of coasting distance

Fig. 10.3 shows the pattern in which the servo motor comes to a stop when the dynamic brake is operated. Use equation 10.2 to calculate an approximate coasting distance to a stop. The dynamic brake time constant τ varies with the servo motor and machine operation speeds. (Refer to (2) of this section.)

A working part generally has a friction force. Therefore, actual coasting distance will be shorter than a maximum coasting distance calculated with the following equation.

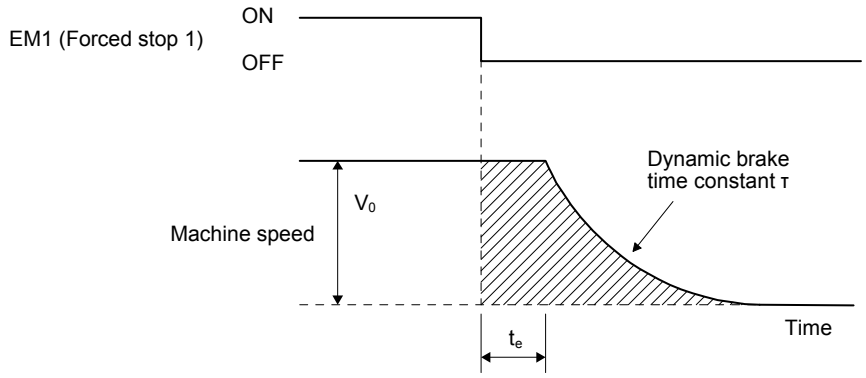

Fig. 10.3 Dynamic brake operation diagram

$$L_{max} = \frac{V_0}{60} \cdot \left\{ t_e + \tau \left(1 + \frac{J_L}{J_M} \right) \right\} \quad \cdots\cdots (10.2)$$

L_{max}: Maximum coasting distance ····· [mm]
V_0: Machine's fast feed speed ····· [mm/min]
J_M: Moment of inertia of the servo motor ····· [× 10^{-4} kg•m^2]
J_L: Load moment of inertia converted into equivalent value on servo motor shaft ····· [× 10^{-4} kg•m^2]
τ: Dynamic brake time constant ····· [s]
t_e: Delay time of control section ····· [s]
There is internal relay delay time of about 10 ms.

(2) Dynamic brake time constant

The following shows necessary dynamic brake time constant τ for equation 10.2.

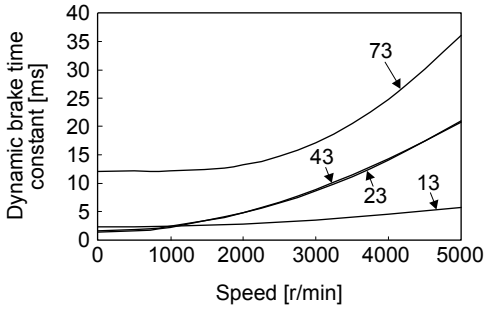

HG-KN series

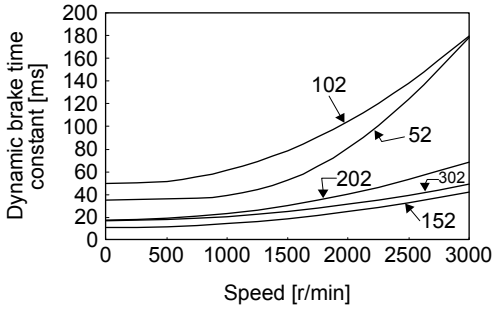

HG-SN series

10.3.2 Permissible load to motor inertia when the dynamic brake is used

Use the dynamic brake under the load to motor inertia ratio indicated in the following table. If the ratio is higher than this value, the dynamic brake may burn. If there is a possibility that the ratio may exceed the value, contact your local sales office.

The values of the permissible load to motor inertia ratio in the table are the values at the maximum rotation speed of the servo motor.

Servo motor	Permissible load to motor inertia ratio [multiplier]
HG-KN13_	30
HG-KN23_	
HG-KN43_	
HG-KN73_	
HG-SN52_	
HG-SN102_	
HG-SN152_	
HG-SN202_	24
HG-SN302_	16

10.4 Cable bending life

The bending life of the cables is shown below. This graph calculated values. Since they are not guaranteed values, provide a little allowance for these values.

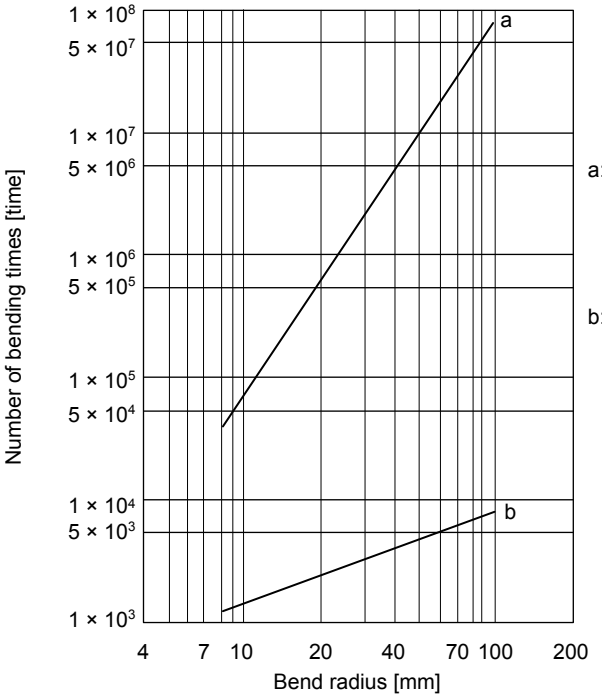

a: Long bending life encoder cable
Long bending life motor power cable
Long bending life electromagnetic brake cable
SSCNET III cable using long distance cable

b: Standard encoder cable
Standard motor power cable
Standard electromagnetic brake cable
SSCNET III cable using inside panel standard cord
SSCNET III cable using outside panel standard cable

10.5 Inrush current at power-on

POINT
●The inrush current values can change depending on frequency of turning on/off the power and ambient temperature.

The following table indicates the inrush currents (reference data) that will flow when 240 V AC is applied at the power supply capacity of 2500 kVA and the wiring length of 1 m. Even when you use a 1-phase 200 V AC power supply with MR-JE-10B to MR-JE-200B, the inrush currents will be the same.

Servo amplifier	Inrush currents (A_{0-P})
MR-JE-10B, MR-JE-20B, MR-JE-40B	32 A (attenuated to approx. 3 A in 20 ms)
MR-JE-70B, MR-JE-100B	36 A (attenuated to approx. 7 A in 20 ms)
MR-JE-200B, MR-JE-300B	102 A (attenuated to approx. 12 A in 20 ms)

Since large inrush currents flow in the power supplies, always use molded-case circuit breakers and magnetic contactors. (Refer to section 11.7.)
When circuit protectors are used, it is recommended that the inertia delay type, which is not tripped by an inrush current, be used.

MEMO

11. OPTIONS AND PERIPHERAL EQUIPMENT

⚠WARNING	●Before connecting options and peripheral equipment, turn off the power and wait for 15 minutes or more until the charge lamp turns off. Otherwise, an electric shock may occur. In addition, when confirming whether the charge lamp is off or not, always confirm it from the front of the servo amplifier.

⚠CAUTION	●Use the specified peripheral equipment and options to prevent a malfunction or a fire.

POINT

●We recommend using HIV wires to wire the servo amplifiers, options, and peripheral equipment. Therefore, the recommended wire sizes may differ from those used for the previous servo amplifiers.

11.1 Cable/connector sets

POINT

●The IP rating indicated for cables and connectors is their protection against ingress of dust and raindrops when they are connected to a servo amplifier or servo motor. If the IP rating of the cable, connector, servo amplifier and servo motor vary, the overall IP rating depends on the lowest IP rating of all components.

Please purchase the cable and connector options indicated in this section for this servo amplifier.

11.1.1 Combinations of cable/connector sets

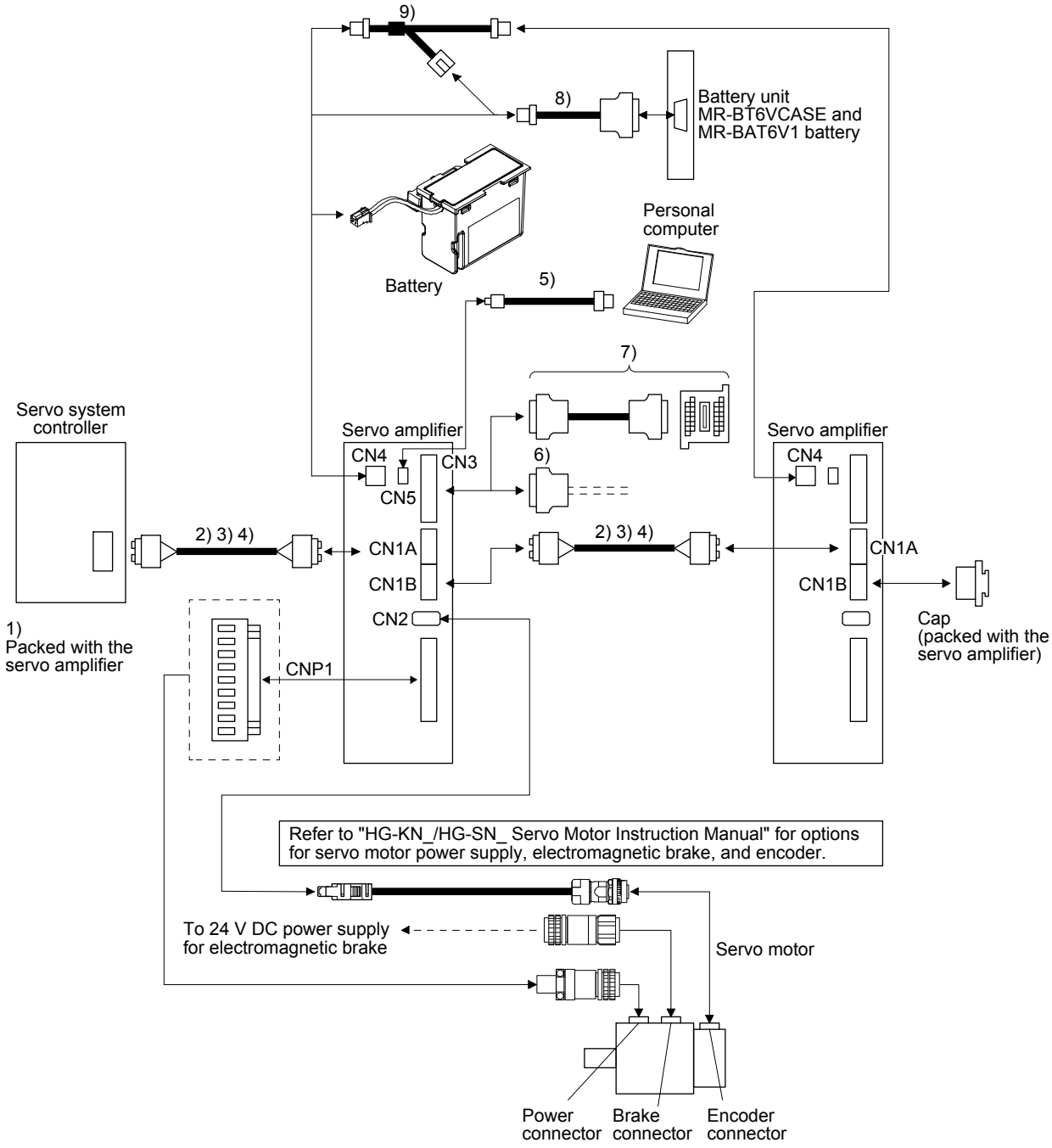

No.	Product name	Model	Description	Application
1)	Servo amplifier CNP1 power connector	MR-JECNP1-01	Connector for CNP1: 09JFAT-SAXGDK-H5.0 (JST) Applicable wire size: AWG 18 to 14 Insulator OD: to 3.9 mm	Supplied with servo amplifiers of 1 kW or less
			Open tool: J-FAT-OT (JST)	
		MR-JECNP1-02	Connector for CNP1: 07JFAT-SAXGFK-XL (JST) Applicable wire size: AWG 16 to 10 Insulator OD: to 4.7 mm	Supplied with servo amplifiers of 2 kW and 3 kW
			Open tool: J-FAT-OT-EXL (JST)	
	Servo amplifier CNP2 power connector	MR-JECNP2-02	Connector for CNP2: 03JFAT-SAXGFK-XL (JST) Applicable wire size: AWG 16 to 10 Insulator OD: to 4.7 mm	
2)	SSCNET III cable	MR-J3BUS_M Cable length: 0.15 m to 3 m (Refer to section 11.1.2.)	Connector: PF-2D103 (JAE) Connector: PF-2D103 (JAE)	Standard cord inside cabinet
3)	SSCNET III cable	MR-J3BUS_M-A Cable length: 5 m to 20 m (Refer to section 11.1.2.)		Standard cable outside cabinet
4)	SSCNET III cable	MR-J3BUS_M-B Cable length: 30 m to 50 m (Refer to section 11.1.2.)	Connector: CF-2D103-S (JAE) Connector: CF-2D103-S (JAE)	Long distance cable
5)	USB cable	MR-J3USBCBL3M Cable length: 3 m	CN5 connector mini-B connector (5 pins) Personal computer connector A connector	For connection with PC-AT compatible personal computer
6)	Connector set	MR-CCN1	Connector: 10120-3000PE Shell kit: 10320-52F0-008 (3M or equivalent)	
7)	Junction terminal block (recommended)		PS7DW-20V14B-F (Yoshida Electric Industry) MR-J2HBUS_M The junction terminal block PS7DW-20V14B-F is not an option. To use the junction terminal block, option MR-J2HBUS_M is necessary. Refer to section 11.3 for details.	

No.	Product name	Model	Description		Application
8)	Battery cable	MR-BT6V1CBL_M Cable length: 0.3 m or 1 m (Refer to section 11.1.3.)	Housing: PAP-02V-0 Contact: SPHD-001G0-P0.5 (JST)	Connector: 10114-3000PE Shell kit: 10314-52F0-008 (3M or equivalent)	For connection with battery unit
9)	Junction battery cable	MR-BT6V2CBL_M Cable length: 0.3 m or 1 m (Refer to section 11.1.3.)	Housing: PAP-02V-0 Contact: SPHD-001G0-P0.5 (JST)	Housing: PALR-02VF Contact: SPAL-001T-P0.5 (JST)	For battery junction

11.1.2 SSCNET III cable

POINT

- Do not look directly at the light generated from the CN1A connector and CN1B connector of servo amplifier or the end of SSCNET III cable. The light can be a discomfort when it enters the eye.
- Refer to appendix 6 for a long distance cable over 50 m and ultra-long bending life cable.

(1) Model explanations

The numbers in the cable length field of the table indicate the symbol filling the underline "_" in the cable model. The cables of the lengths with the numbers are available.

Cable model	Cable length											Bending life	Application and remark
	0.15 m	0.3 m	0.5 m	1 m	3 m	5 m	10 m	20 m	30 m	40 m	50 m		
MR-J3BUS_M	015	03	05	1	3							Standard	Using standard cord inside cabinet
MR-J3BUS_M-A						5	10	20				Standard	Using standard cable outside cabinet
(Note) MR-J3BUS_M-B									30	40	50	Long bending life	Using long distance cable

Note. For cables of 30 m or shorter, contact your local sales office.

(2) Specifications

		Description			
SSCNET III cable model		MR-J3BUS_M		MR-J3BUS_M-A	MR-J3BUS_M-B
SSCNET III cable length		0.15 m	0.3 m to 3 m	5 m to 20 m	30 m to 50 m
Optical cable (cord)	Minimum bending radius	25 mm		Enforced covering cable: 50 mm Cord: 25 mm	Enforced covering cable: 50 mm Cord: 30 mm
	Tension strength	70 N	140 N	420 N (Enforced covering cable)	980 N (Enforced covering cable)
	Temperature range for operation (Note)	-40 °C to 85 °C			-20 °C to 70 °C
	Ambience	Indoors (no direct sunlight), no solvent or oil			
	Appearance [mm]	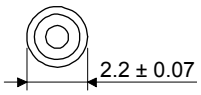	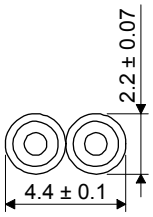	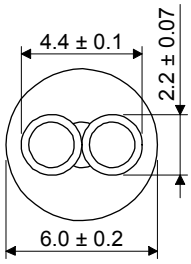	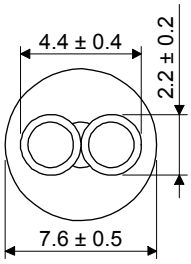

Note. This temperature range for use is the value for optical cable (cord) only. The temperature condition for the connector is the same as that for the servo amplifier.

(3) Dimensions

(a) MR-J3BUS015M

[Unit: mm]

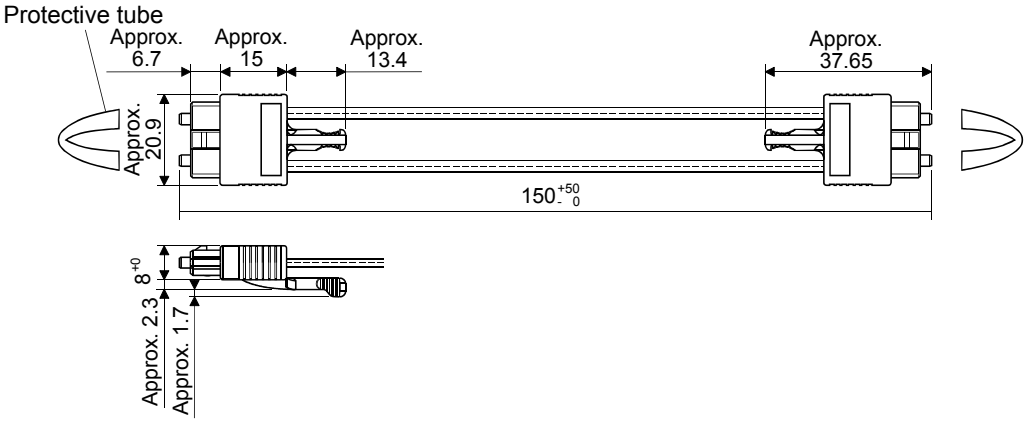

(b) MR-J3BUS03M to MR-J3BUS3M

Refer to the table shown in (1) of this section for cable length (L).

[Unit: mm]

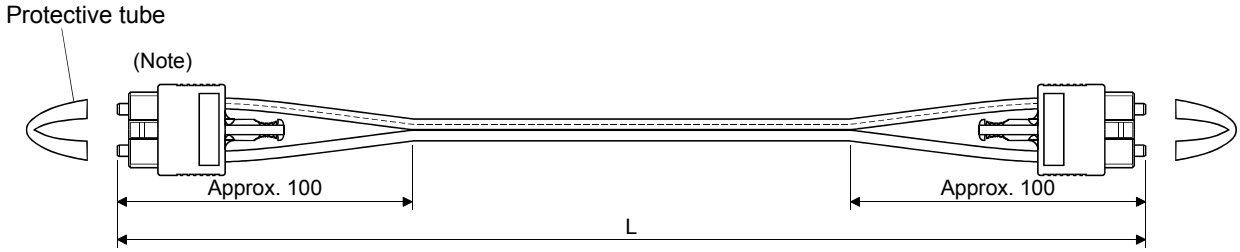

Note. Dimension of connector part is the same as that of MR-J3BUS015M.

(c) MR-J3BUS5M-A to MR-J3BUS20M-A/MR-J3BUS30M-B to MR-J3BUS50M-B

Refer to the table shown in (1) of this section for cable length (L).

SSCNET III cable	Variable dimensions [mm]	
	A	B
MR-J3BUS5M-A to MR-J3BUS20M-A	100	30
MR-J3BUS30M-B to MR-J3BUS50M-B	150	50

[Unit: mm]

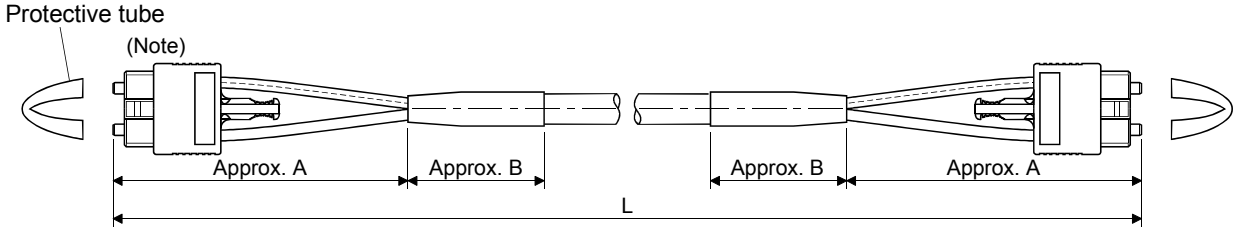

Note. Dimension of connector part is the same as that of MR-J3BUS015M.

11.1.3 Battery cable and junction battery cable

(1) Model explanations

The numbers in the cable length field of the table indicate the symbol filling the underline "_" in the cable model. The cables of the lengths with the numbers are available.

Cable model	Cable length		Bending life	Application and remark
	0.3 m	1 m		
MR-BT6V1CBL_M	03	1	Standard	For connecting to MR-BT6VCASE
MR-BT6V2CBL_M	03	1	Standard	For junction

(2) MR-BT6V1CBL_M

(a) Appearance

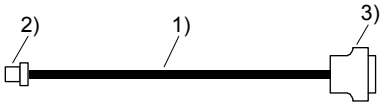

Components	Description
1) Cable	VSVC 7/0.18 × 2C
2) Connector	Housing: PAP-02V-0 Contact: SPHD-001G0-P0.5 (JST)
3) Connector	Connector: 10114-3000PE Shell kit: 10314-52F0-008 (3M or equivalent)

(b) Internal wiring diagram

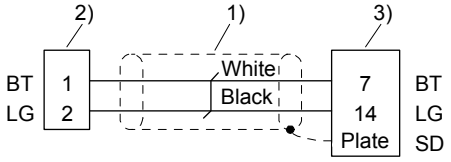

(3) MR-BT6V2CBL_M

(a) Appearance

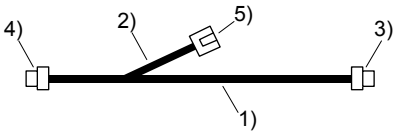

Components	Description
1) Cable	VSVC 7/0.18 × 2C
2) Cable	
3) Connector	Housing: PAP-02V-0 Contact: SPHD-001G0-P0.5 (JST)
4) Connector	
5) Connector	Housing: PALR-02VF Contact: SPAL-001T-P0.5 (JST)

(b) Internal wiring diagram

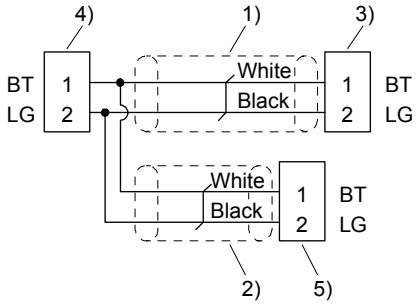

11.2 Regenerative option

> ⚠CAUTION
> ●Do not use servo amplifiers with regenerative options other than the combinations specified below.
> Otherwise, it may cause a fire.

11.2.1 Combination and regenerative power

The power values in the table are resistor-generated powers and not rated powers.

Servo amplifier	Regenerative power [W]					
	Built-in regenerative resistor	MR-RB032 [40 Ω]	MR-RB12 [40 Ω]	MR-RB30 [13 Ω]	MR-RB32 [40 Ω]	(Note) MR-RB50 [13 Ω]
MR-JE-10B		30				
MR-JE-20B		30	100			
MR-JE-40B	10	30	100			
MR-JE-70B	20	30	100		300	
MR-JE-100B	20	30	100		300	
MR-JE-200B	100			300		500
MR-JE-300B	100			300		500

Note. Always install a cooling fan.

11.2.2 Selection of regenerative option

Use the following method when regeneration occurs continuously in vertical motion applications or when it is desired to make an in-depth selection of the regenerative option.

(1) Regenerative energy calculation

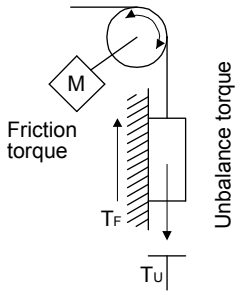

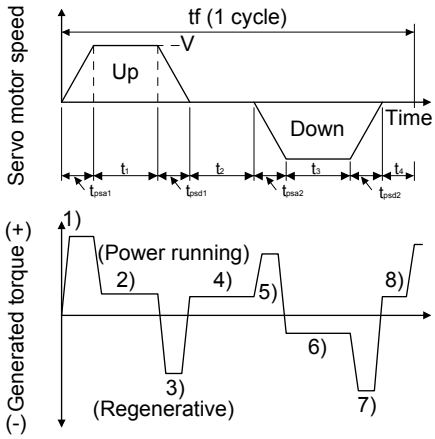

Formulas for calculating torque and energy in operation

Regenerative power	Torque applied to servo motor [N•m]	Energy E [J]
1)	$T_1 = \frac{(J_L/\eta + J_M) \cdot V}{9.55 \cdot 10^4} \cdot \frac{1}{t_{psa1}} + T_U + T_F$	$E_1 = \frac{0.1047}{2} \cdot V \cdot T_1 \cdot t_{psa1}$
2)	$T_2 = T_U + T_F$	$E_2 = 0.1047 \cdot V \cdot T_2 \cdot t_1$
3)	$T_3 = \frac{-(J_L \cdot \eta + J_M) \cdot V}{9.55 \cdot 10^4} \cdot \frac{1}{t_{psa2}} + T_U + T_F$	$E_3 = \frac{0.1047}{2} \cdot V \cdot T_3 \cdot t_{psa2}$
4), 8)	$T_4, T_8 = T_U$	$E_4, E_8 \geq 0$ (No regeneration)
5)	$T_5 = \frac{(J_L/\eta + J_M) \cdot V}{9.55 \cdot 10^4} \cdot \frac{1}{t_{psd2}} - T_U + T_F$	$E_5 = \frac{0.1047}{2} \cdot V \cdot T_5 \cdot t_{psd2}$
6)	$T_6 = -T_U + T_F$	$E_6 = 0.1047 \cdot V \cdot T_6 \cdot t_3$
7)	$T_7 = \frac{-(J_L \cdot \eta + J_M) \cdot V}{9.55 \cdot 10^4} \cdot \frac{1}{t_{psd2}} - T_U + T_F$	$E_7 = \frac{0.1047}{2} \cdot V \cdot T_7 \cdot t_{psd2}$

From the calculation results in 1) to 8), find the absolute value (Es) of the sum total of negative energies.

(2) Losses of servo motor and servo amplifier in regenerative mode
The following table lists the efficiencies and other data of the servo motor and servo amplifier in the regenerative mode.

Servo amplifier	Inverse efficiency [%]	Capacitor charging [J]
MR-JE-10B	55	11
MR-JE-20B	75	11
MR-JE-40B	85	14
MR-JE-70B	85	25

Servo amplifier	Inverse efficiency [%]	Capacitor charging [J]
MR-JE-100B	85	25
MR-JE-200B	85	42
MR-JE-300B	85	42

Inverse efficiency (η): Efficiency including some efficiencies of the servo motor and servo amplifier when rated (regenerative) torque is generated at rated speed. Since the efficiency varies with the speed and generated torque, allow for about 10%.
Capacitor charging (Ec): Energy charged into the electrolytic capacitor in the servo amplifier

Subtract the capacitor charging from the result of multiplying the sum total of regenerative energies by the inverse efficiency to calculate the energy consumed by the regenerative option.

$ER\ [J] = \eta \cdot Es - Ec$

Calculate the power consumption of the regenerative option on the basis of one-cycle operation period tf [s] to select the necessary regenerative option.

$PR\ [W] = ER/tf$

11.2.3 Parameter setting

Set [Pr. PA02] according to the option to be used.

[Pr. PA02]

0	0		

Regenerative option selection
00: Regenerative option is not used.
- For servo amplifier of 200 W or less, regenerative resistor is not used.
- For servo amplifier of 0.4 kW to 3 kW, built-in regenerative resistor is used.

02: MR-RB032
03: MR-RB12
04: MR-RB32
05: MR-RB30
06: MR-RB50 (Cooling fan is required)

11.2.4 Connection of regenerative option

POINT

- When you use a regenerative option with an MR-JE-40B to MR-JE-100B, remove the built-in regenerative resistor and wiring from the servo amplifier.
- When MR-RB50 is used, a cooling fan is required to cool it. The cooling fan should be prepared by the customer.
- For the wire sizes used for wiring, refer to section 11.6.
- A built-in regenerative resistor should not be mounted or removed frequently.
- When you remount a built-in regenerative resistor, check the lead wires of the built-in regenerative resistor for scratches or cracks.

The regenerative option generates heat of 100 °C higher than the ambient temperature. Fully consider heat dissipation, installation position, wires used, etc. before installing the option. For wiring, use flame-retardant wires or make the wires flame retardant and keep them away from the regenerative option. Always use twisted cables of max. 5 m length for connection with the servo amplifier.

(1) MR-JE-100B or less

When you use a regenerative option for MR-JE-40B to MR-JE-100B, remove wirings of P+ and C, remove the built-in regenerative resistor, and then connect the regenerative option between P+ and C. G3 and G4 are terminals for the thermal sensor. Between G3 and G4 is opened when the regenerative option overheats abnormally.

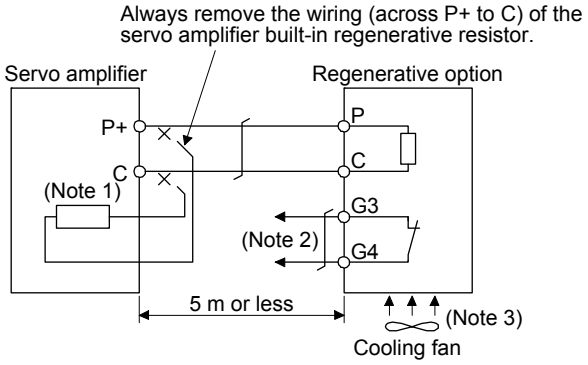

Note 1. The built-in regenerative resistor is not provided for MR-JE-10B and MR-JE-20B.

2. Configure a sequence which will switch off the magnetic contactor when abnormal heating occurs.
   G3-G4 contact specifications
   Maximum voltage: 120 V AC/DC
   Maximum current: 0.5 A/4.8 V DC
   Maximum capacity: 2.4 VA

3. When the ambient temperature is higher than 55 °C and the regenerative load ratio is higher than 60% in MR-RB32, forcibly cool the air with a cooling fan (1.0 m^3/min or more, 92 mm × 92 mm). A cooling fan is not required if the ambient temperature is 35 °C or lower. (A cooling fan is required for the shaded area in the following graph.)

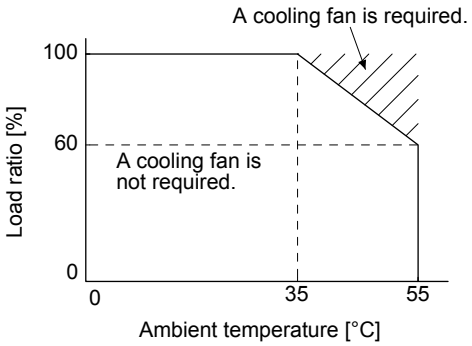

To remove the built-in regenerative resistor mounted on the back of MR-JE-40B to MR-JE-100B, refer to the following illustration and follow the procedures 1) to 3).

1) Disconnect the wirings of the built-in regenerative resistor from the power connector (CNP1). (Refer to section 3.3.3 (2) (b).)

2) Remove the wirings of the built-in regenerative resistor from the closest position to the power connector (CNP1) in order. Please pay full attention not to break the wirings.

3) Remove the screw fixing the built-in regenerative resistor and dismount the built-in regenerative resistor.

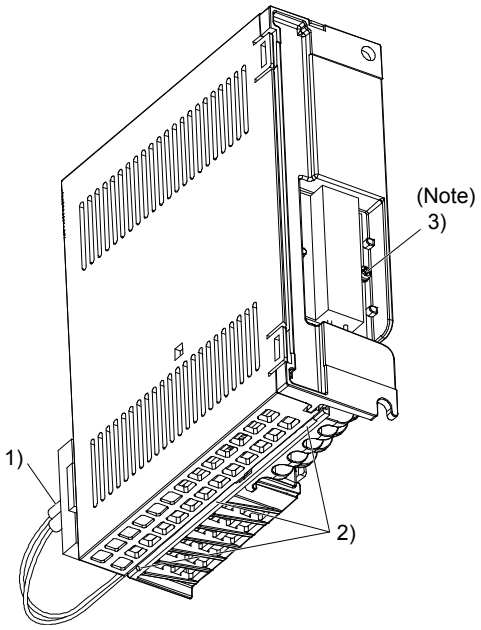

Note. Screw size: M3
Tightening torque: 0.72 [N•m]

(2) MR-JE-200B or more

Always remove the wiring from across P+ to D and mount the regenerative option across P+ to C. G3 and G4 are terminals for the thermal sensor. Between G3 and G4 is opened when the regenerative option overheats abnormally.

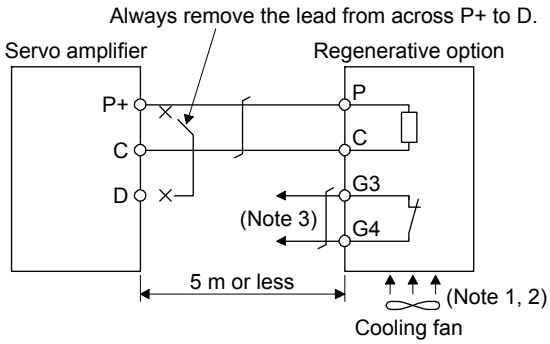

Note 1. When using the MR-RB50, forcibly cool it with a cooling fan (1.0 m^3/min or more, 92 mm × 92 mm).

2. When the ambient temperature is higher than 55 °C and the regenerative load ratio is higher than 60% in MR-RB30, forcibly cool the air with a cooling fan (1.0 m^3/min or more, 92 mm × 92 mm). A cooling fan is not required if the ambient temperature is 35 °C or lower. (A cooling fan is required for the shaded area in the following graph.)

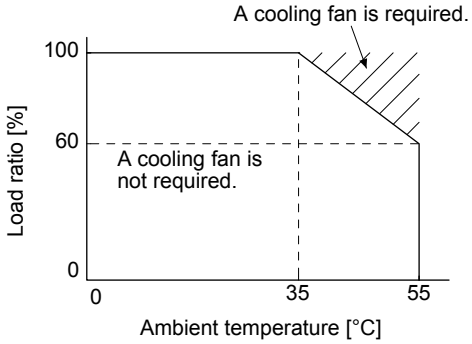

3. Configure a sequence which will switch off the magnetic contactor when abnormal heating occurs.

G3-G4 contact specifications

Maximum voltage: 120 V AC/DC

Maximum current: 0.5 A/4.8 V DC

Maximum capacity: 2.4 VA

11.2.5 Dimensions

(1) MR-RB12

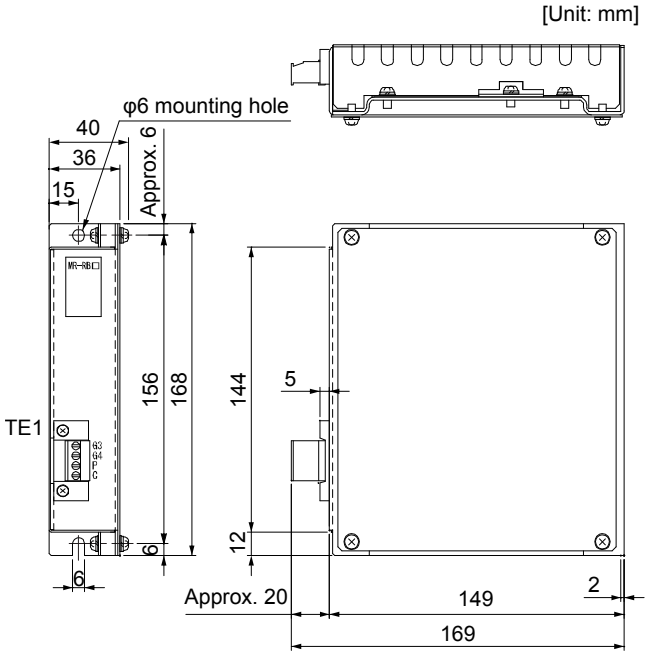

- TE1 terminal block

G3
G4
P
C

Applicable wire size: 0.2 mm^2 to 2.5 mm^2 (AWG 24 to 12)
Tightening torque: 0.5 to 0.6 [N•m]

- Mounting screw
  Screw size: M5
  Tightening torque: 3.24 [N•m]

Mass: 1.1 [kg]

(2) MR-RB30 and MR-RB32

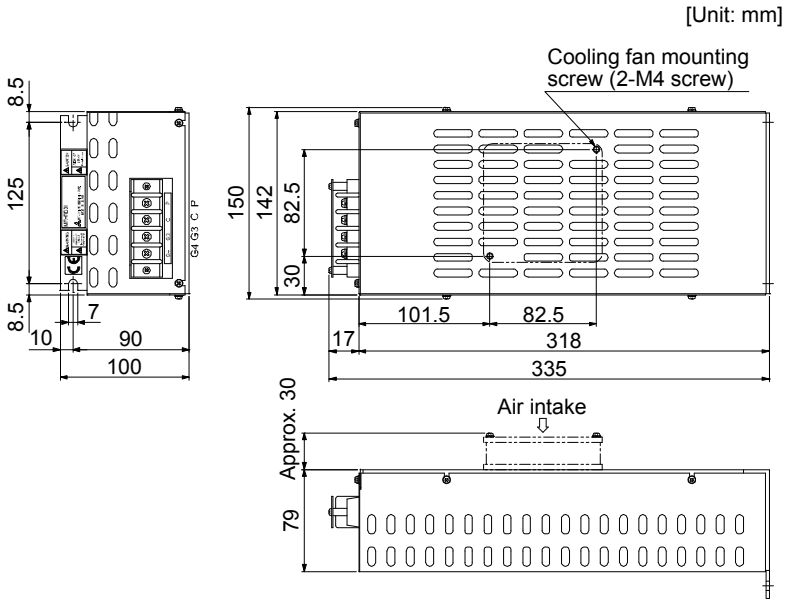

- Terminal block

P
C
G3
G4

Terminal screw size: M4
Tightening torque: 1.2 [N•m]

- Mounting screw
  Screw size: M6
  Tightening torque: 5.4 [N•m]

Mass: 2.9 [kg]

(3) MR-RB50

[Unit: mm]

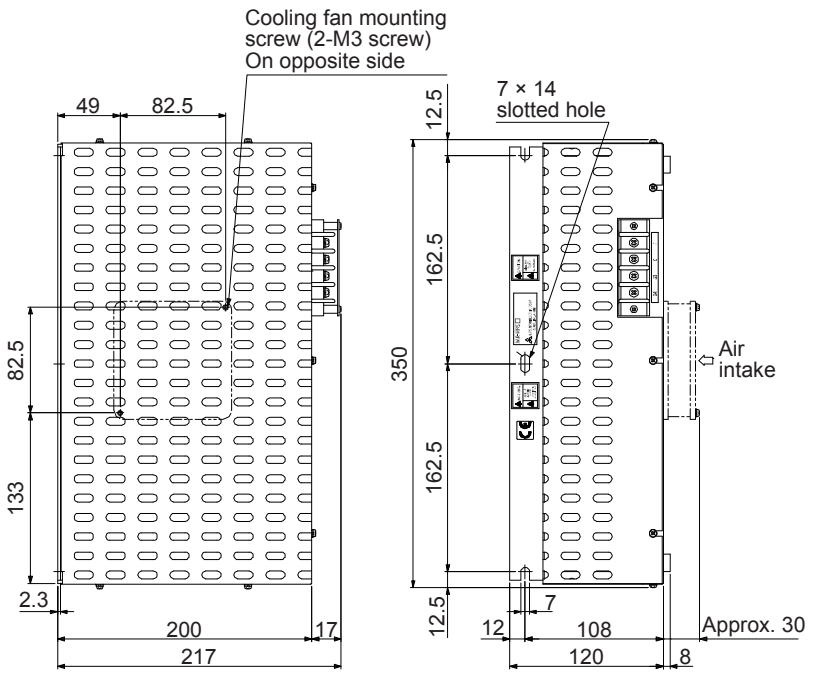

- Terminal block

P
C
G3
G4

Terminal screw size: M4
Tightening torque: 1.2 [N•m]

- Mounting screw
  Screw size: M6
  Tightening torque: 5.4 [N•m]

Mass: 5.6 [kg]

(4) MR-RB032

[Unit: mm]

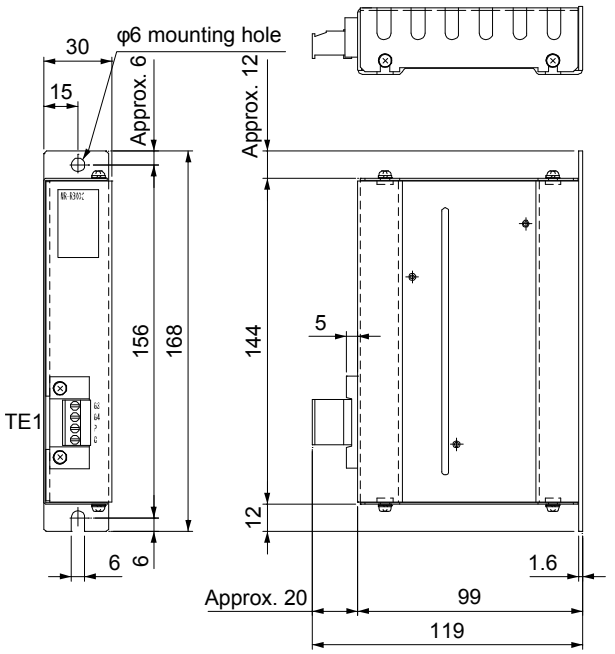

- TE1 terminal block

G3
G4
P
C

Applicable wire size: 0.2 mm^2 (AWG 24) to 2.5 mm^2 (AWG 12)
Tightening torque: 0.5 to 0.6 [N•m]

- Mounting screw
  Screw size: M5
  Tightening torque: 3.24 [N•m]

Mass: 0.5 [kg]

11.3 Junction terminal block PS7DW-20V14B-F (recommended)

(1) Usage

Always use the junction terminal block (PS7DW-20V14B-F (Yoshida Electric Industry)) with the option cable (MR-J2HBUS_M) as a set. A connection example is shown below.

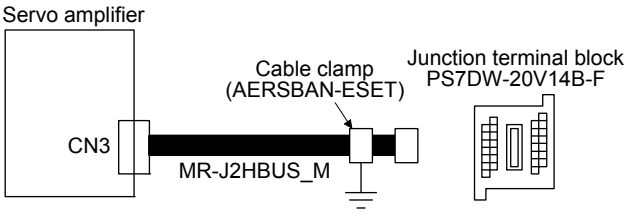

Ground the option cable on the junction terminal block side with the cable clamp fitting (AERSBAN-ESET). For the use of the cable clamp fitting, refer to section 11.10, (2) (c).

(2) Connection diagram of MR-J2HBUS_M cable and junction terminal block

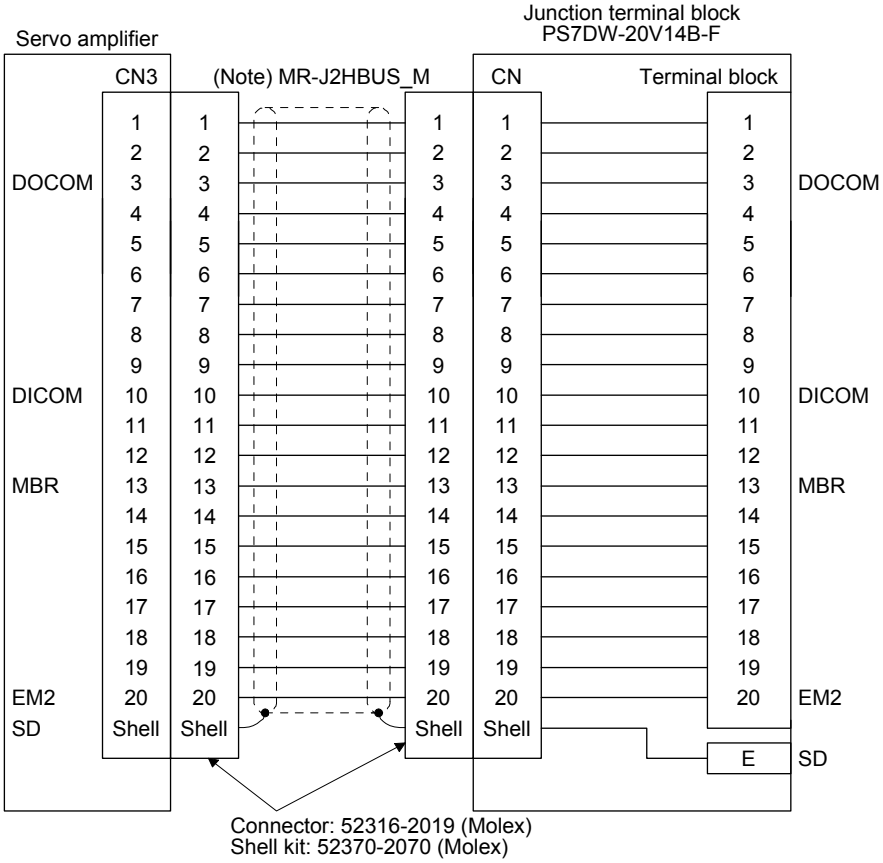

Note. A symbol indicating the cable length is put in _.

05: 0.5 m

1: 1 m

5: 5 m

(3) Dimensions of junction terminal block

[Unit: mm]

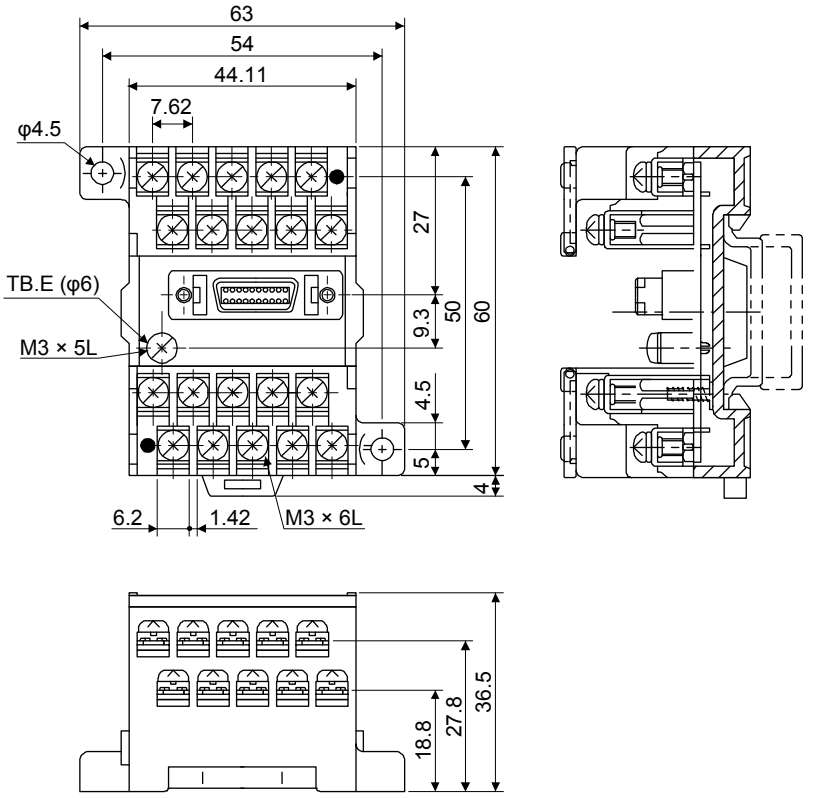

11.4 MR Configurator2

MR Configurator2 (SW1DNC-MRC2-E) uses the communication function of the servo amplifier to perform parameter setting changes, graph display, test operation, etc. on a personal computer.

11.4.1 Specifications

Item	Description
Project	Create/read/save/delete project, system setting, and print
Parameter	Parameter setting
Monitor	Display all, I/O monitor, graph, and ABS data display
Diagnosis	Alarm display, alarm onset data, drive recorder, no motor rotation, system configuration, life diagnosis, machine diagnosis
Test operation	JOG operation, positioning operation, motor-less operation, DO forced output, program operation, test mode information
Adjustment	One-touch tuning, tuning, and machine analyzer
Others	Servo assistant, parameter setting range update, machine unit conversion setting, help display, connecting to Mitsubishi Electric FA site

11.4.2 System requirements

(1) Component

To use MR Configurator2 (SW1DNC-MRC2-E), the following components are required in addition to the servo amplifier and servo motor.

Equipment	Description	
(Note 1, 2, 3, 4, and 5) Personal computer	OS	Microsoft® Windows® 8.1 Enterprise Operating System Microsoft® Windows® 8.1 Pro Operating System Microsoft® Windows® 8.1 Operating System Microsoft® Windows® 8 Enterprise Operating System Microsoft® Windows® 8 Pro Operating System Microsoft® Windows® 8 Operating System Microsoft® Windows® 7 Enterprise Operating System Microsoft® Windows® 7 Ultimate Operating System Microsoft® Windows® 7 Professional Operating System Microsoft® Windows® 7 Home Premium Operating System Microsoft® Windows® 7 Starter Operating System Microsoft® Windows Vista® Enterprise Operating System Microsoft® Windows Vista® Ultimate Operating System Microsoft® Windows Vista® Business Operating System Microsoft® Windows Vista® Home Premium Operating System Microsoft® Windows Vista® Home Basic Operating System Microsoft® Windows® XP Professional Operating System, Service Pack2 or later Microsoft® Windows® XP Home Edition Operating System, Service Pack2 or later
	CPU (recommended)	Desktop personal computer: Intel® Celeron® processor 2.8 GHz or more Laptop personal computer: Intel® Pentium® M processor 1.7 GHz or more
	Memory (recommended)	512 MB or more (for 32-bit OS), 1 GB or more (for 64-bit OS)
	Free space on the hard disk	1 GB or more
	Communication interface	USB port
Browser	Windows® Internet Explorer® 4.0 or higher	
Display	One whose resolution is 1024 × 768 or more and that can provide a high color (16 bit) display. Connectable with the above personal computer.	
Keyboard	Connectable with the above personal computer.	
Mouse	Connectable with the above personal computer.	
Printer	Connectable with the above personal computer.	
USB cable	MR-J3USBCBL3M	

Note 1. On some personal computers, MR Configurator2 may not run properly.

2. When Windows® XP or later is used, the following functions cannot be used.
   - Windows® Program Compatibility mode
   - Fast User Switching
   - Remote Desktop
   - Large Fonts Mode (Display property)
   - DPI settings other than 96 DPI (Display property)

   For 64-bit operating system, MR Configurator2 is compatible with Windows® 7 and Windows® 8.
3. When Windows® 7 or later is used, the following functions cannot be used.
   - Windows XP Mode
   - Windows touch
4. When using MR Configurator2 with Windows Vista® or later, log in as a user having USER authority or higher.
5. When Windows® 8 is used, the following functions cannot be used.
   - Hyper-V
   - Modern UI style

(2) Connection with servo amplifier

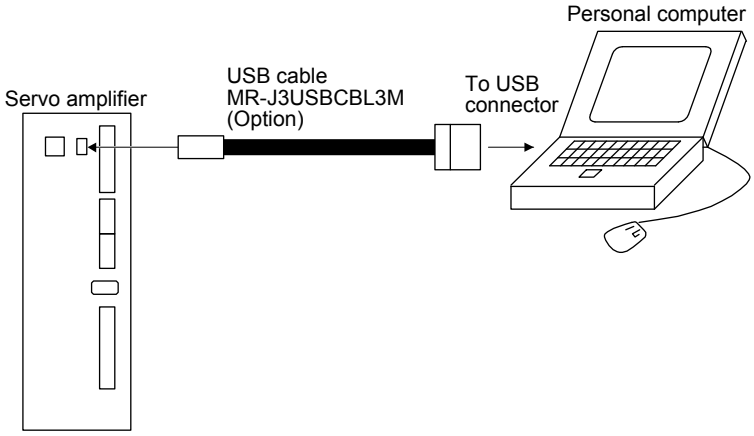

11.4.3 Precautions for using USB communication function

Note the following to prevent an electric shock and malfunction of the servo amplifier.

(1) Power connection of personal computer
Connect your personal computer with the following procedures.

(a) When using a personal computer with AC power supply
1) When using a personal computer with a three-core power plug or power plug with grounding wire, use a three-pin socket or ground the grounding wire.

2) When your personal computer has two-core plug and has no grounding wire, connect the personal computer to the servo amplifier with the following procedures.

a) Disconnect the power plug of the personal computer from an AC power socket.

b) Check that the power plug was disconnected and connect the device to the servo amplifier.

c) Connect the power plug of the personal computer to the AC power socket.

(b) When using a personal computer with battery
You can use as it is.

(2) Connection with other devices using servo amplifier communication function
When the servo amplifier is charged with electricity due to connection with a personal computer and the charged servo amplifier is connected with other devices, the servo amplifier or the connected devices may malfunction. Connect the servo amplifier and other devices with the following procedures.

(a) Shut off the power of the device for connecting with the servo amplifier.

(b) Shut off the power of the servo amplifier which was connected with the personal computer and check the charge lamp is off.

(c) Connect the device with the servo amplifier.

(d) Turn on the power of the servo amplifier and the device.

11.5 Battery

POINT
●Refer to appendix 2 and 3 for battery transportation and the new EU Battery Directive.

The battery is used to construct an absolute position detection system. For construction of an absolute position detection system, refer to chapter 12.

11.5.1 Selection of battery

Applicable batteries differ depending on servo amplifiers. Select a proper battery.

(1) Applications of the batteries

Model	Name	Application	Built-in battery
MR-BAT6V1SET-A	Battery	For absolute position data-hold	MR-BAT6V1
MR-BT6VCASE	Battery case	For absolute position data-hold for multiple-axis servo motors	MR-BAT6V1

(2)Combination of battery and servo amplifier

Model	MR-JE-_B
MR-BAT6V1SET-A	○
MR-BT6VCASE	○

11.5.2 MR-BAT6V1SET-A battery

POINT
●For the specifications and the year and month of manufacture of the built-in MR-BAT6V1 battery, refer to section 11.5.4.

(1) Parts identification and dimensions

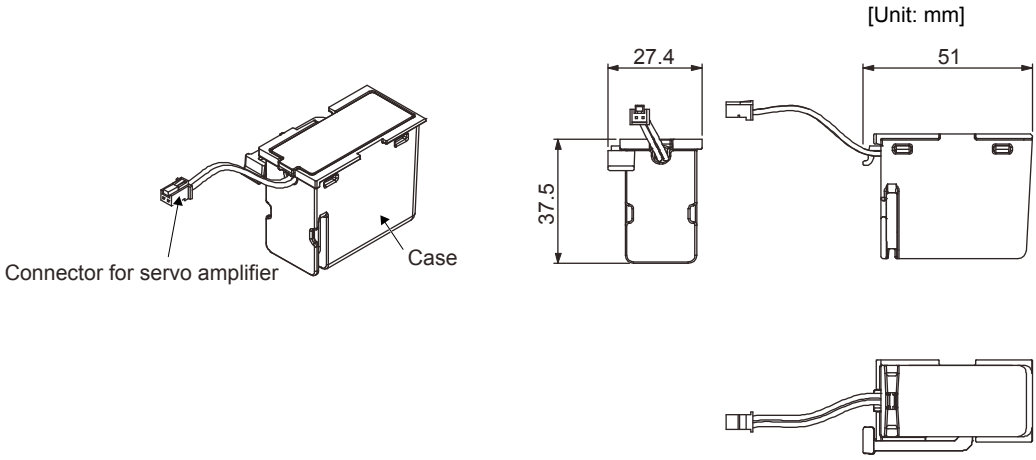

Mass: 55 [g] (including MR-BAT6V1 battery)

(2) Battery connection
Connect a battery as follows.

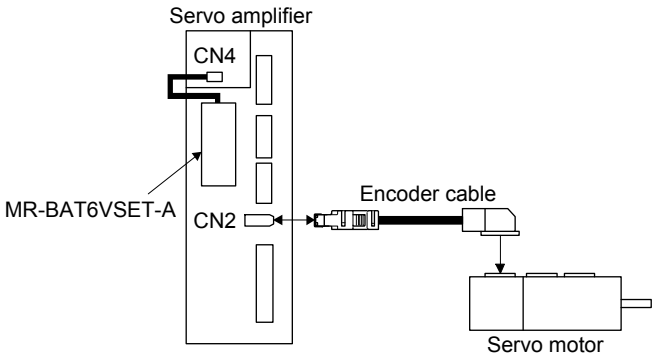

(3) Battery replacement procedure

⚠WARNING	●Before replacing a battery, turn off the power and wait for 15 minutes or more until the charge lamp turns off. Otherwise, an electric shock may occur. In addition, when confirming whether the charge lamp is off or not, always confirm it from the front of the servo amplifier.

⚠CAUTION	●The internal circuits of the servo amplifier may be damaged by static electricity. Always take the following precautions. ・Ground human body and work bench. ・Do not touch the conductive areas, such as connector pins and electrical parts, directly by hand.

POINT

●Replacing a battery will erase the absolute position data.
●Before replacing batteries, check that the new battery is within battery life.

(a) Mounting method

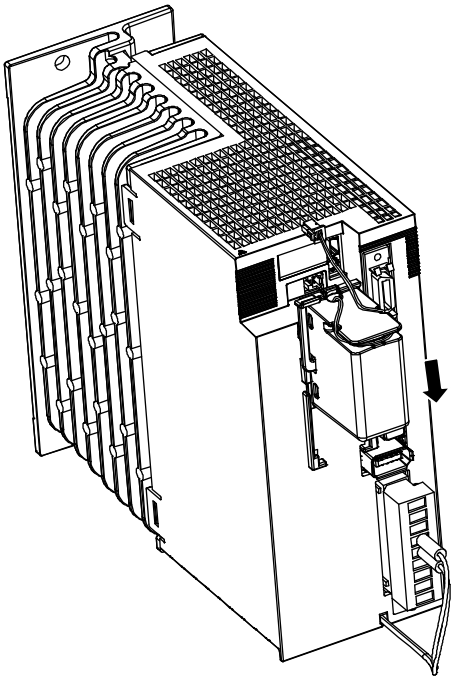

Pull down the battery along the rail.

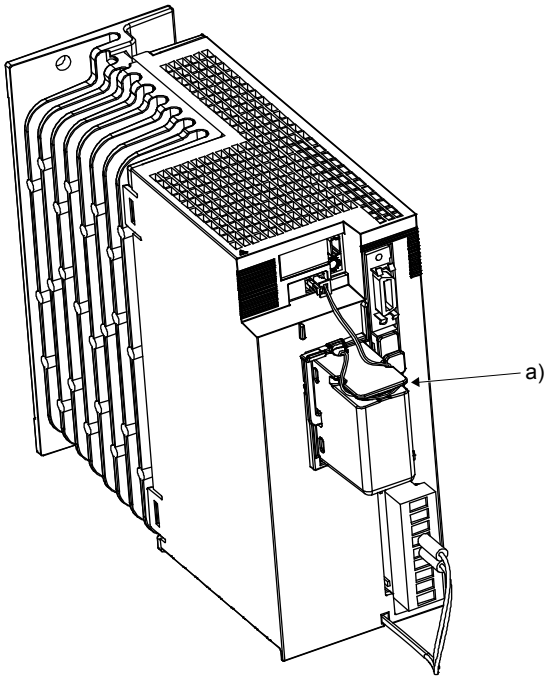

For MR-JE-100B or less, wrap the excess wire around a) of the battery.

(b) Removal procedure

⚠CAUTION	●Pulling out the connector of the battery without the lock release lever pressed may damage the CN4 connector of the servo amplifier or the connector of the battery.

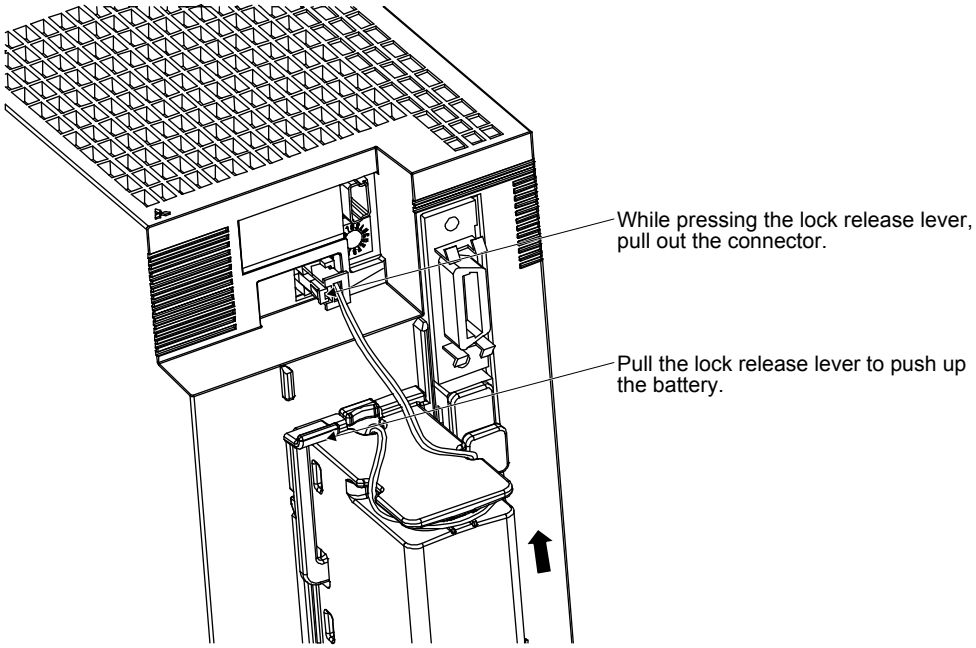

(4) Replacement procedure of the built-in battery

When the MR-BAT6V1SET-A reaches the end of its life, replace the MR-BAT6V1 battery in the MR-BAT6V1SET-A.

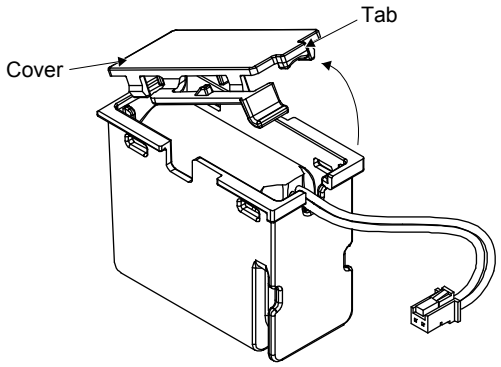

Hold the tab and open the cover.

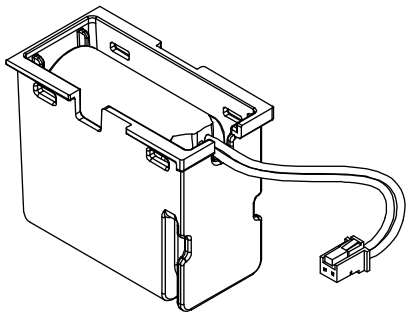

Replace the battery with a new MR-BAT6V1 battery.

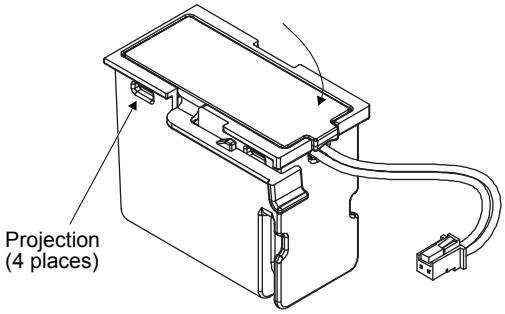

Press the cover until it is fixed with the projection of the locking part to close the cover.

11.5.3 MR-BT6VCASE battery case

> POINT
>
> ●The battery unit consists of an MR-BT6VCASE battery case and five MR-BAT6V1 batteries.
>
> ●For the specifications and the year and month of manufacture of the MR-BAT6V1 battery, refer to section 11.5.4.

MR-BT6VCASE is a case used for connecting and mounting five MR-BAT6V1 batteries. No battery is included in the battery case. Prepare MR-BAT6V1 batteries separately.

(1) Number of connectable servo motors
One MR-BT6VCASE case can hold the absolute position data of up to 8-axis servo motors. Servo motors in an incremental system are included as the axis numbers.

(2) Dimensions

[Unit: mm]

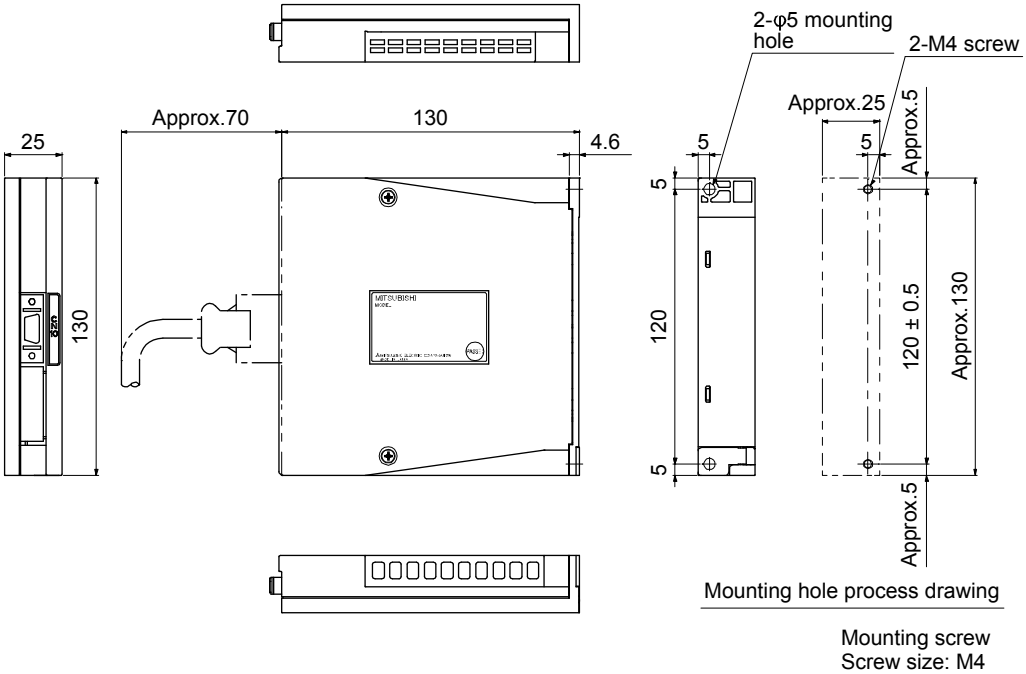

[Mass: 0.18 kg]

(3) Battery connection

POINT
●One battery unit can be connected to up to 8-axis servo motors. Servo motors in an incremental system are included as the axis numbers.

(a) When using 1-axis servo amplifier

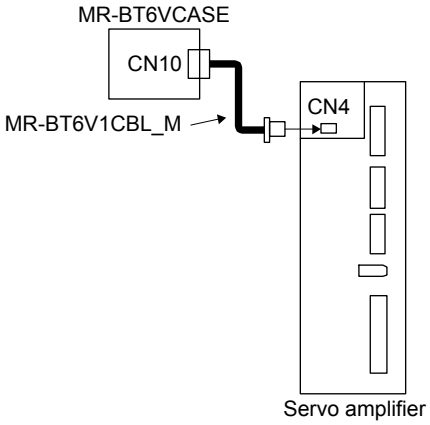

(b) When using up to 8-axis servo amplifiers

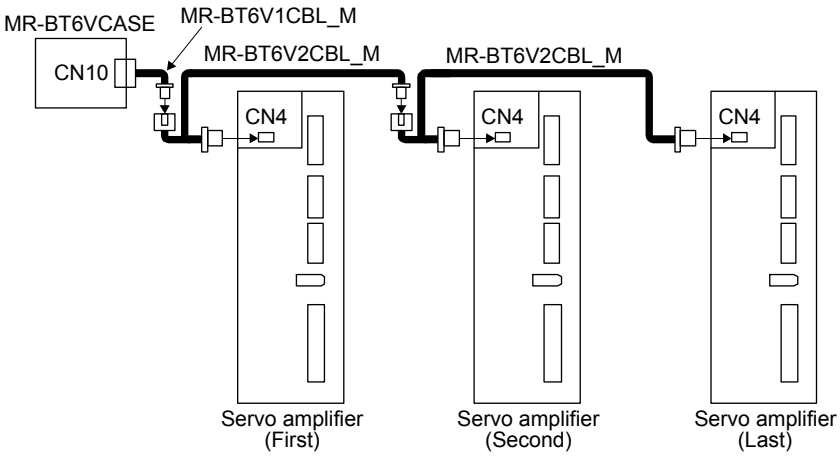

(4) Battery replacement procedure

⚠WARNING	●Before replacing a battery, turn off the power and wait for 15 minutes or more until the charge lamp turns off. Otherwise, an electric shock may occur. In addition, when confirming whether the charge lamp is off or not, always confirm it from the front of the servo amplifier.

⚠CAUTION	●The internal circuits of the servo amplifier may be damaged by static electricity. Always take the following precautions. ・Ground human body and work bench. ・Do not touch the conductive areas, such as connector pins and electrical parts, directly by hand.

POINT

●Replacing a battery will erase the absolute position data.
●Before replacing batteries, check that the new battery is within battery life.

(a) Assembly of the battery unit

⚠CAUTION
- Do not mount new and old batteries together.
- When you change a battery, change all batteries at the same time.

POINT
- Always mount five MR-BAT6V1 batteries to the MR-BT6VCASE battery case.

1) Things to be prepared

Product name	Model	Quantity	Remarks
Battery case	MR-BT6VCASE	1	MR-BT6VCASE is a case used for connecting and mounting five MR-BAT6V1 batteries.
Battery	MR-BAT6V1	5	Lithium battery (primary battery, nominal + 6 V)

2) Disassembly and assembly of the battery case MR-BT6VCASE

a) Disassembly of the case

MR-BT6VCASE is shipped assembled. To mount MR-BAT6V1 batteries, the case needs to be disassembled.

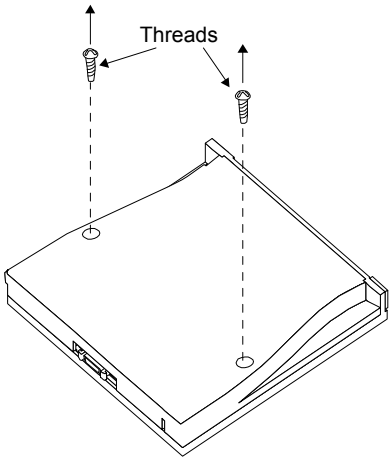

Remove the two screws using a Phillips head screwdriver.

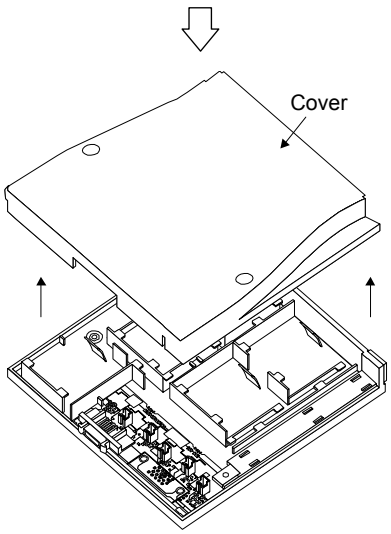

Remove the cover.

Parts identification

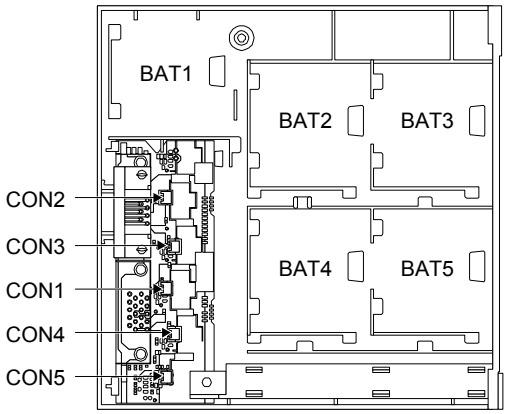

b) Mounting MR-BAT6V1

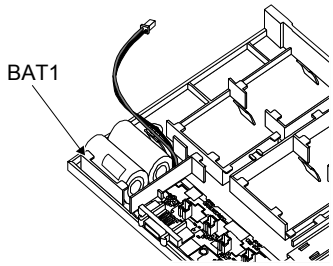

Securely mount an MR-BAT6V1 to the BAT1 holder.

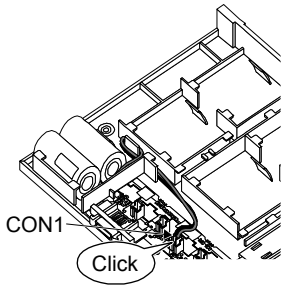

Insert the MR-BAT6V1 connector mounted on the BAT1 holder to CON1.
Confirm the click sound at this point.
The connector has to be connected in the right direction.
If the connector is pushed forcefully in the incorrect direction, the connector will break.
Place the MR-BAT6V1 lead wire to the duct designed to store lead wires.
Insert MR-BAT6V1 to the holder in the same procedure in the order from BAT2 to BAT5.

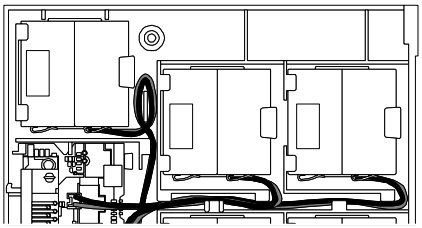

Bring out the lead wire from the space between the ribs, and bend it as shown above to store it in the duct. Connect the lead wire to the connector. Be careful not to get the lead wire caught in the case or other parts.
When the lead wire is damaged, external short circuit may occur, and the battery can become hot.

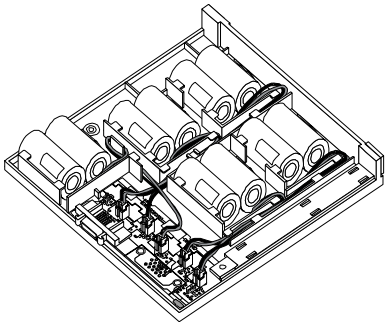

c) Assembly of the case
After all MR-BAT6V1 batteries are mounted, fit the cover and insert screws into the two holes and tighten them. Tightening torque is 0.71 N•m.

POINT
●When assembling the case, be careful not to get the lead wires caught in the fitting parts or the screwing parts.

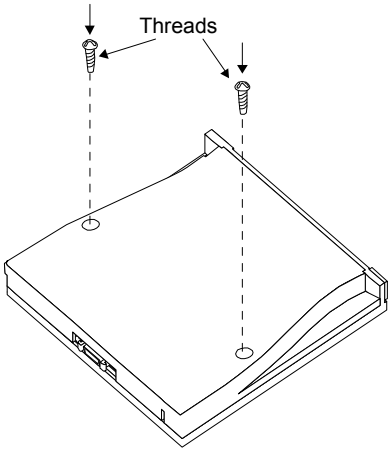

d) Precautions for removal of battery
The connector attached to the MR-BAT6V1 battery has the lock release lever. When removing the connector, pull out the connector while pressing the lock release lever.

3) Battery cable removal

⚠CAUTION	●Pulling out the connector of the MR-BT6V1CBL and MR-BT6V2CBL without the lock release lever pressed may damage the CN4 connector of the servo amplifier or the connector of the MR-BT6V1CBL or MR-BT6V2CBL.

Pull out the connector in the same procedure as that of the MR-BAT6V1SET-A. Refer to section 11.5.2 (3) (b).

11.5.4 MR-BAT6V1 battery

The MR-BAT6V1 battery is used for a backup of the MR-BAT6V1SET-A and MR-BAT6V1SET and built in the MR-BT6VCASE. Always store the MR-BAT6V1 in a case when using it.
The year and month of manufacture of the MR-BAT6V1 battery are described on the rating plate put on an MR-BAT6V1 battery.

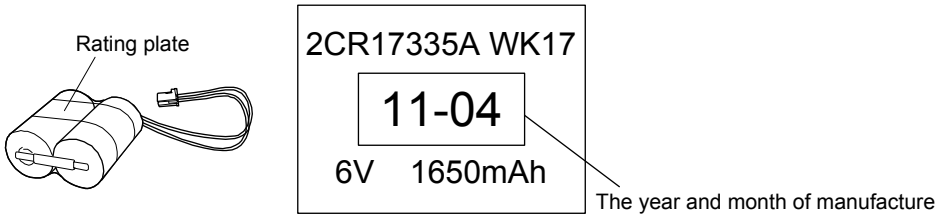

Item	Description
Battery pack	2CR17335A (primary lithium battery)
Nominal voltage [V]	6
Nominal capacity [mAh]	1650
Storage temperature [°C]	0 to 55
Operating temperature [°C]	0 to 55
Amount of lithium metal [g]	1.2
Mercury content	Less than 1 ppm
Dangerous goods class	Inapplicable to Class 9 (Battery pack containing 2 g or less lithium)
Operating humidity and storage humidity	90%RH or less (non-condensing)
(Note) Battery life	5 years from date of manufacture
Mass [g]	34

Note. Quality of the batteries degrades by the storage condition. The battery life is 5 years from the production date regardless of the connection status.

11.6 Selection example of wires

POINT

- To comply with the IEC/EN/UL/CSA standard, use the wires shown in appendix 4 for wiring. To comply with other standards, use a wire that is complied with each standard.
- The following shows selection conditions of wire size.
  Construction condition: Single wire set in midair
  Wire length: 30 m or shorter

The following diagram shows the wires used for wiring. Use the wires given in this section or equivalent.

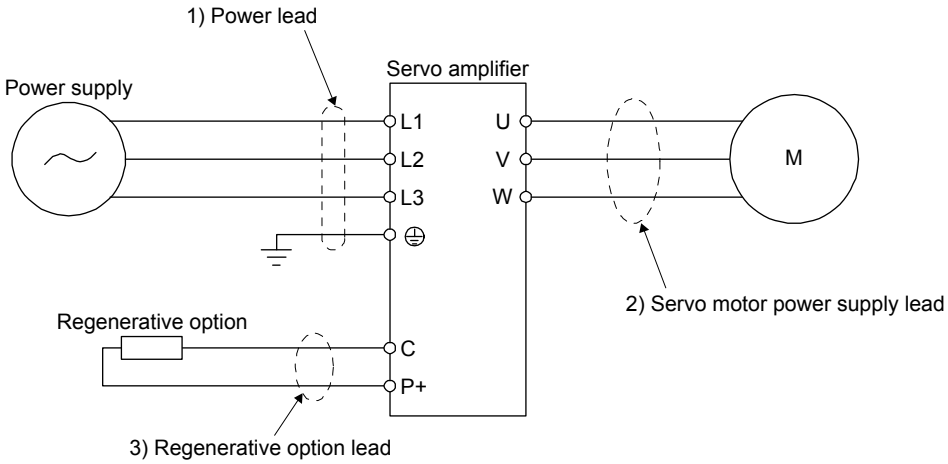

Table 11.1 shows examples for using the 600 V grade heat-resistant polyvinyl chloride insulated wire (HIV wire).

Table 11.1 Wire size selection example (HIV wire)

Servo amplifier	Wire [mm^2]		
	1) L1/L2/L3/⏚	3) P+/C	2) U/V/W/⏚ (Note 1)
MR-JE-10B	2 (AWG 14)	2 (AWG 14)	AWG 18 to 14 (Note 2)
MR-JE-20B			
MR-JE-40B			
MR-JE-70B			
MR-JE-100B			
MR-JE-200B (3-phase power supply input)			AWG 16 to 10
MR-JE-200B (1-phase power supply input)	3.5 (AWG 12)		
MR-JE-300B	2 (AWG 14)		

Note 1. The wire size shows applicable size of the servo amplifier connector. For wires connecting to the servo motor, refer to "HG-KN_/HG-SN_ Servo Motor Instruction Manual".
2. Be sure to use the size of 2 mm^2 for compliance with the IEC/EN/UL/CSA standard.

11.7 Molded-case circuit breakers, fuses, magnetic contactors

⚠CAUTION	●Select a molded-case circuit breaker with a fast shut-off time to prevent smoke or a fire. ●Always use one molded-case circuit breaker and one magnetic contactor with one servo amplifier.

When using a fuse instead of the molded-case circuit breaker, use the one having the specifications given in this section.

<table>
<tr><th rowspan="3">Servo amplifier</th><th colspan="3">Molded-case circuit breaker (Note 1 and 4)</th><th colspan="3">Fuse</th><th rowspan="3">Magnetic contactor (Note 2)</th></tr>
<tr><th colspan="2">Frame, rated current</th><th rowspan="2">Voltage AC [V]</th><th rowspan="2">Class</th><th rowspan="2">Current [A]</th><th rowspan="2">Voltage AC [V]</th></tr>
<tr><th>Power factor improving reactor is not used</th><th>Power factor improving reactor is used</th></tr>
<tr><td>MR-JE-10B</td><td rowspan="2">30 A frame 5 A</td><td rowspan="2">30 A frame 5 A</td><td rowspan="8">240</td><td rowspan="8">T</td><td rowspan="2">10</td><td rowspan="8">300</td><td rowspan="6">S-N10
S-T10</td></tr>
<tr><td>MR-JE-20B</td></tr>
<tr><td>MR-JE-40B</td><td>30 A frame 10 A</td><td>30 A frame 5 A</td><td>15</td></tr>
<tr><td>MR-JE-70B</td><td rowspan="2">30 A frame 15 A</td><td rowspan="2">30 A frame 10 A</td><td rowspan="2">20</td></tr>
<tr><td>MR-JE-100B
(3-phase power supply input)</td></tr>
<tr><td>MR-JE-100B
(1-phase power supply input)</td><td>30 A frame 15 A</td><td>30 A frame 15 A</td><td>30</td></tr>
<tr><td>MR-JE-200B</td><td>30 A frame 20 A</td><td>30 A frame 20 A</td><td>40</td><td>S-N20
(Note 3)
S-T21</td></tr>
<tr><td>MR-JE-300B</td><td>30 A frame 30 A</td><td>30 A frame 30 A</td><td>70</td><td>S-N20
S-T21</td></tr>
</table>

Note 1. When having the servo amplifier comply with the IEC/EN/UL/CSA standard, refer to appendix 4.
2. Use a magnetic contactor with an operation delay time (interval since a current is applied to the coil until the contact closes) of 80 ms or shorter.
3. S-N18 can be used when auxiliary contact is not required.
4. Use a molded-case circuit breaker having the operation characteristics equal to or higher than Mitsubishi general-purpose products.

11.8 Power factor improving AC reactor

The following shows the advantages of using a power factor improving AC reactor.

- It improves the power factor by increasing the form factor of the servo amplifier's input current.
- It decreases the power supply capacity.
- The input power factor is improved to about 80%.

When using power factor improving reactors for two servo amplifiers or more, be sure to connect a power factor improving reactor to each servo amplifier. If using only one power factor improving reactor, enough improvement effect of phase factor cannot be obtained unless all servo amplifiers are operated.

(1) Connection example

(a) For 3-phase 200 V AC to 240 V AC power supply

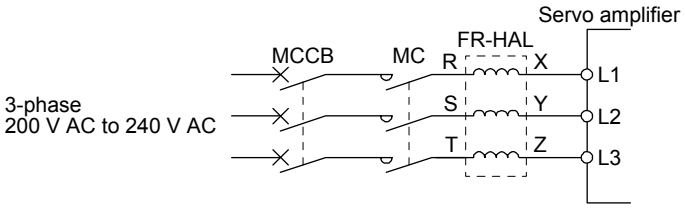

(b) For 1-phase 200 V AC to 240 V AC power supply of MR-JE-10B to MR-JE-100B

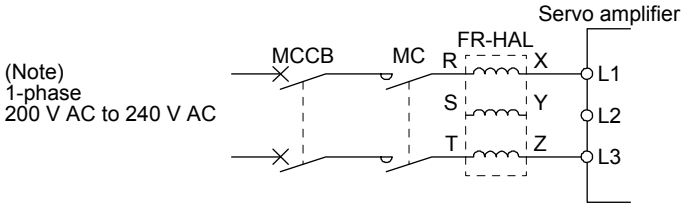

Note. Connect the power supply to L1 and L3. Leave L2 open.

(c) For 1-phase 200 V AC to 240 V AC power supply of MR-JE-200B

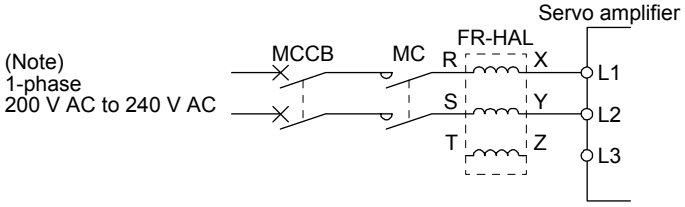

Note. Connect the power supply to L1 and L2. Leave L3 open.

(2) Dimensions

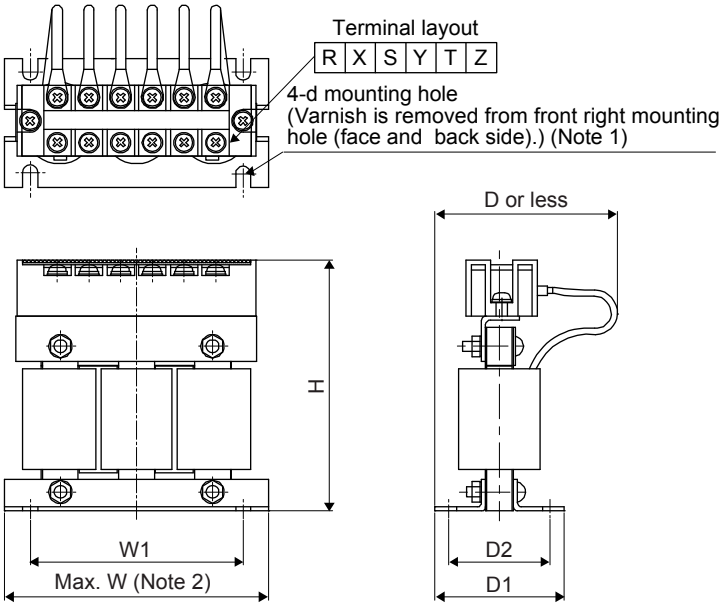

Fig. 11.1

Servo amplifier	Power factor improving AC reactor	Dimensions	Dimensions [mm]							Terminal size	Mass [kg]
			W	W1	H	D (Note 3)	D1	D2	d		
MR-JE-10B, MR-JE-20B	FR-HAL-0.4K	Fig. 11.1	104	84	99	72	51	40	M5	M4	0.6
MR-JE-40B	FR-HAL-0.75K		104	84	99	74	56	44	M5	M4	0.8
MR-JE-70B	FR-HAL-1.5K		104	84	99	77	61	50	M5	M4	1.1
MR-JE-100B (3-phase power supply input)	FR-HAL-2.2K		115 (Note 3)	40	115	77	71	57	M6	M4	1.5
MR-JE-100B (1-phase power supply input) MR-JE-200B (3-phase power supply input)	FR-HAL-3.7K		115 (Note 3)	40	115	83	81	67	M6	M4	2.2
MR-JE-200B (1-phase power supply input) MR-JE-300B	FR-HAL-5.5K		115 (Note 3)	40	115	83	81	67	M6	M4	2.3

Note 1. Use this for grounding.
2. W ± 2 is applicable for FR-HAL-0.4K to FR-HAL-1.5K.
3. Maximum dimensions. The dimension varies depending on the input/output lines.

11.9 Relay (recommended)

The following relays should be used with the interfaces.

Interface	Selection example
Digital input (interface DI-1) Relay used for digital input command signals	To prevent defective contacts, use a relay for small signal (twin contacts). (Ex.) Omron: type G2A, MY
Digital output (interface DO-1) Relay used for digital output signals	Small relay with 12 V DC or 24 V DC of rated current 40 mA or less (Ex.) Omron: type MY

11.10 Noise reduction techniques

Noises are classified into external noises which enter the servo amplifier to cause it to malfunction and those radiated by the servo amplifier to cause peripheral equipment to malfunction. Since the servo amplifier is an electronic device which handles small signals, the following general noise reduction techniques are required. Also, the servo amplifier can be a source of noise as its outputs are chopped by high carrier frequencies. If peripheral equipment malfunction due to noises produced by the servo amplifier, noise suppression measures must be taken. The measures will vary slightly with the routes of noise transmission.

(1) Noise reduction techniques

(a) General reduction techniques

- Avoid laying power lines (input and output cables) and signal cables side by side or do not bundle them together. Separate power lines from signal cables.
- Use a shielded twisted pair cable for connection with the encoder and for control signal transmission, and connect the external conductor of the cable to the SD terminal.
- Ground the servo amplifier, servo motor, etc. together at one point. (Refer to section 3.11.)

(b) Reduction techniques for external noises that cause the servo amplifier to malfunction

If there are noise sources (such as a magnetic contactor, an electromagnetic brake, and many relays which make a large amount of noise) near the servo amplifier and the servo amplifier may malfunction, the following countermeasures are required.

- Provide surge killers on the noise sources to suppress noises.
- Attach data line filters to the signal cables.
- Ground the shields of the encoder connecting cable and the control signal cables with cable clamp fittings.
- Although a surge absorber is built into the servo amplifier, to protect the servo amplifier and other equipment against large exogenous noise and lightning surge, attaching a varistor to the power input section of the equipment is recommended.

(c) Techniques for noises radiated by the servo amplifier that cause peripheral equipment to malfunction

Noises produced by the servo amplifier are classified into those radiated from the cables connected to the servo amplifier and its main circuits (input and output circuits), those induced electromagnetically or statically by the signal cables of the peripheral equipment located near the main circuit cables, and those transmitted through the power supply cables.

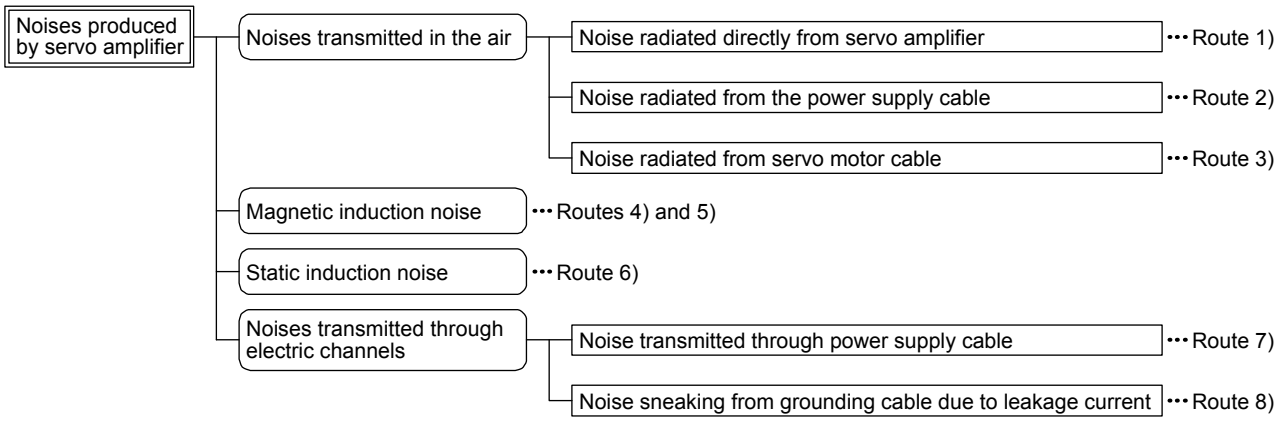

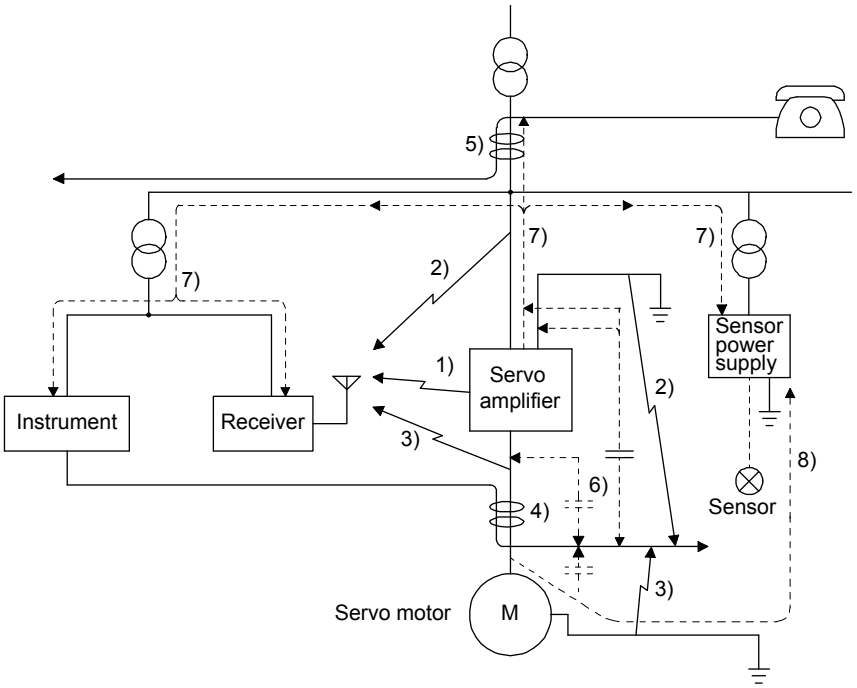

Noise transmission route	Suppression techniques
1) 2) 3)	When measuring instruments, receivers, sensors, etc. which handle weak signals and may malfunction due to noise and/or their signal cables are contained in a cabinet together with the servo amplifier or run near the servo amplifier, such devices may malfunction due to noises transmitted through the air. The following techniques are required. 1. Provide maximum clearance between easily affected devices and the servo amplifier. 2. Provide maximum clearance between easily affected signal cables and the I/O cables of the servo amplifier. 3. Avoid wiring the power lines (input/output lines of the servo amplifier) and signal lines side by side or bundling them together. 4. Insert a line noise filter to the I/O cables or a radio noise filter on the input line. 5. Use shielded wires for the signal and power lines, or put the lines in separate metal conduits.
4) 5) 6)	When the power lines and the signal lines are laid side by side or bundled together, magnetic induction noise and static induction noise will be transmitted through the signal cables and malfunction may occur. The following techniques are required. 1. Provide maximum clearance between easily affected devices and the servo amplifier. 2. Provide maximum clearance between easily affected signal cables and the I/O cables of the servo amplifier. 3. Avoid wiring the power lines (input/output lines of the servo amplifier) and signal lines side by side or bundling them together. 4. Use shielded wires for the signal and power lines, or put the lines in separate metal conduits.
7)	When the power supply of peripheral equipment is connected to the power supply of the servo amplifier system, noises produced by the servo amplifier may be transmitted back through the power supply cable and the devices may malfunction. The following techniques are required. 1. Install the radio noise filter (FR-BIF) on the power lines (Input lines) of the servo amplifier. 2. Install the line noise filter (FR-BSF01) on the power lines of the servo amplifier.
8)	When the cables of peripheral equipment are connected to the servo amplifier to make a closed loop circuit, leakage current may flow to malfunction the peripheral equipment. If so, malfunction may be prevented by disconnecting the grounding cable of the peripheral device.

(2) Noise reduction products

(a) Data line filter (recommended)

Noise can be prevented by installing a data line filter onto the encoder cable, etc.
For example, ZCAT3035-1330 by TDK, ESD-SR-250 by NEC TOKIN, GRFC-13 by Kitagawa Industries, and E04SRM563218 by SEIWA ELECTRIC are available as data line filters.
As a reference example, the impedance specifications of the ZCAT3035-1330 (TDK) are indicated below. This impedances are reference values and not guaranteed values.

Impedance [Ω]	
10 MHz to 100 MHz	100 MHz to 500 MHz
80	150

[Unit: mm]

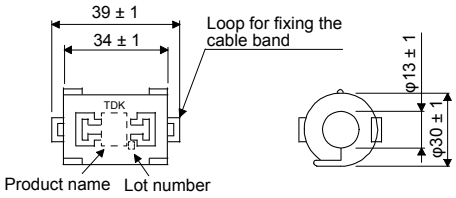

Outline drawing (ZCAT3035-1330)

(b) Surge killer (recommended)

Use of a surge killer is recommended for AC relay, magnetic contactor or the like near the servo amplifier. Use the following surge killer or equivalent.

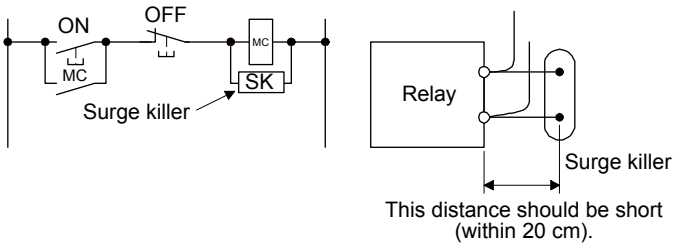

(Ex.) CR-50500 Okaya Electric Industries)

Rated voltage AC [V]	C [μF ± 20%]	R [Ω ± 30%]	Test voltage
250	0.5	50 (1/2 W)	Between terminals: 625 V AC, 50 Hz/60 Hz 60 s Between terminal and case: 2000 V AC, 50 Hz/60 Hz 60 s

Dimensions [Unit: mm]

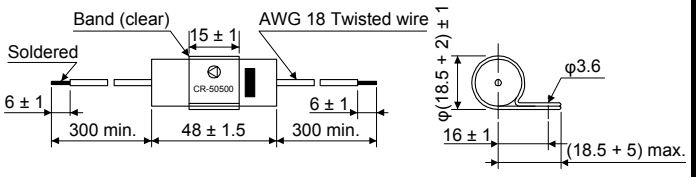

Note that a diode should be installed to a DC relay or the like.
Maximum voltage: Not less than 4 times the drive voltage of the relay or the like
Maximum current: Not less than twice the drive current of the relay or the like

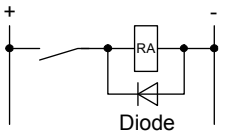

(c) Cable clamp fitting AERSBAN-_SET

Generally, the grounding of the shielded wire may only be connected to the connector's SD terminal. However, the effect can be increased by directly connecting the cable to a grounding plate as shown below.

Install the grounding plate near the servo amplifier for the encoder cable. Peel part of the cable sheath to expose the external conductor, and press that part against the grounding plate with the cable clamp. If the cable is thin, clamp several cables in a bunch.

The cable clamp comes as a set with the grounding plate.

[Unit: mm]

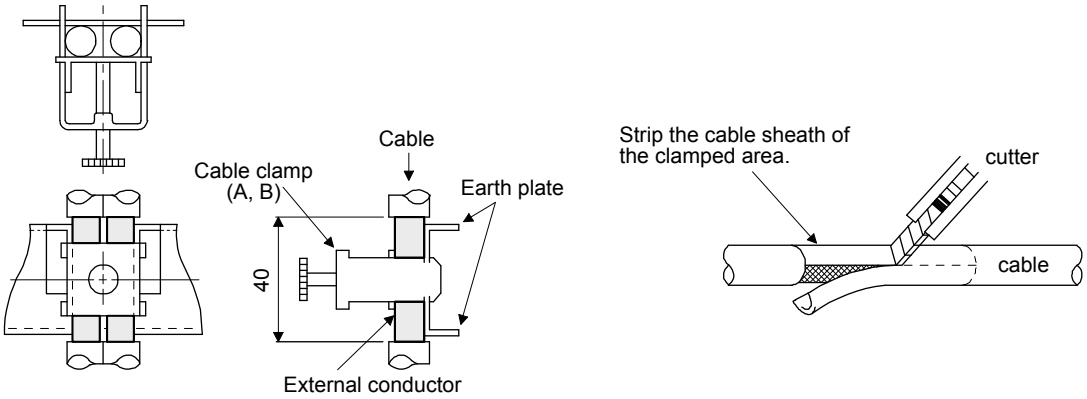

Clamp section diagram

・Dimensions

[Unit: mm]

Grounding plate

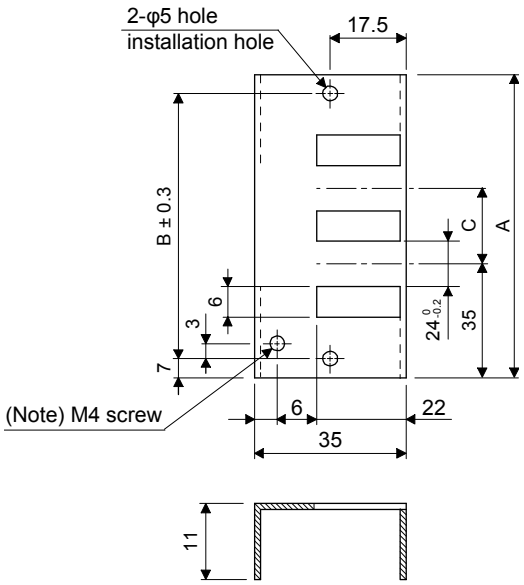

[Unit: mm]

Clamp section diagram

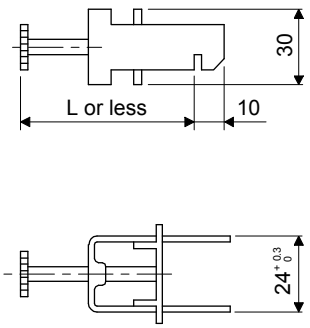

Note. Screw hole for grounding. Connect it to the grounding plate of the cabinet.

Model	A	B	C	Accessory fittings
AERSBAN-DSET	100	86	30	Clamp A: 2pcs.
AERSBAN-ESET	70	56		Clamp B: 1pc.

Clamp fitting	L
A	70
B	45

(d) Line noise filter (FR-BSF01)

This filter is effective in suppressing noises radiated from the power supply side and output side of the servo amplifier and also in suppressing high-frequency leakage current (0-phase current). It especially affects the noises between 0.5 MHz and 5 MHz band.

Connection diagram	Dimensions [Unit: mm]
The line noise filters can be installed on lines of the power supply (L1, L2, and L3) and of the servo motor power (U, V, and W). Pass each of the wires through the line noise filter an equal number of times in the same direction. For the power supply, the effect of the filter rises as the number of passes increases, but generally four passes would be appropriate. For the servo motor power lines, passes must be four times or less. Do not pass the grounding wire through the filter. Or the effect of the filter will drop. Wind the wires by passing through the filter to satisfy the required number of passes as shown in Example 1. If the wires are too thick to wind, use two or more filters to have the required number of passes as shown in Example 2. Place the line noise filters as close to the servo amplifier as possible for their best performance. 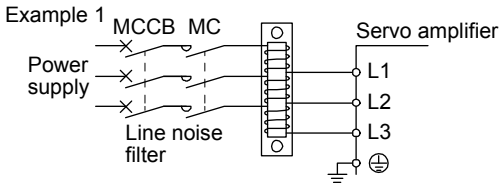 (Number of passes: 4) 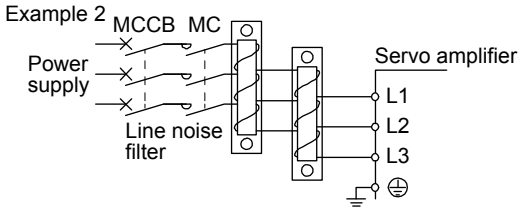 Two filters are used (Total number of passes: 4)	FR-BSF01 (for wire size 3.5 mm^2 (AWG 12) or smaller) 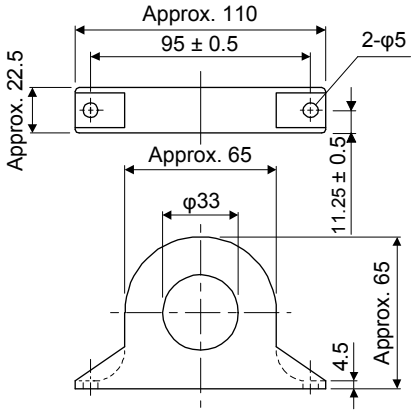

(e) Radio noise filter (FR-BIF)

This filter is effective in suppressing noises radiated from the power supply side of the servo amplifier especially in 10 MHz and lower radio frequency bands. The FR-BIF is designed for the input only.

200 V class: FR-BIF

Connection diagram	Dimensions [Unit: mm]
Make the connection cables as short as possible. Grounding is always required. When using the FR-BIF with a single-phase power supply, always insulate the lead wires that are not used for wiring.	

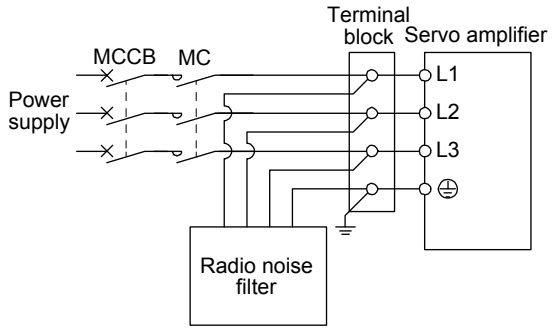

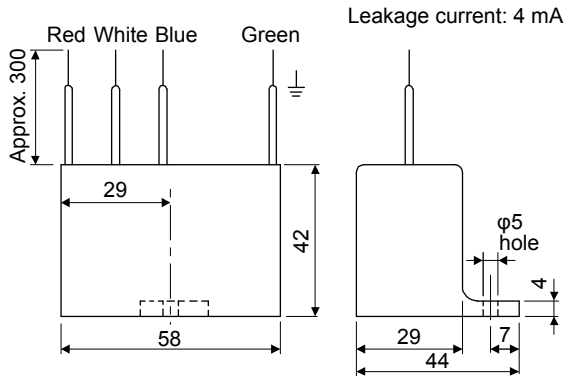

(f) Varistor for input power supply (recommended)

Varistors are effective to prevent exogenous noise and lightning surge from entering the servo amplifier. When using a varistor, connect it between each phase of the input power supply of the equipment. For varistors, the TND20V-431K and TND20V-471K, manufactured by Nippon Chemi-Con, are recommended. For detailed specification and usage of the varistors, refer to the manufacturer catalog.

Power supply voltage	Varistor	Maximum rating					Maximum limit voltage		Static capacity (reference value)	Varistor voltage rating (range) V1 mA
		Permissible circuit voltage		Surge current immunity	Energy immunity	Rated pulse power	[A]	[V]		
		AC [Vrms]	DC [V]	8/20 μs [A]	2 ms [J]	[W]			[pF]	[V]
200 V class	TND20V-431K	275	350	10000/1 time	195	1.0	100	710	1300	430 (387 to 473)
	TND20V-471K	300	385	7000/2 times	215			775	1200	470 (423 to 517)

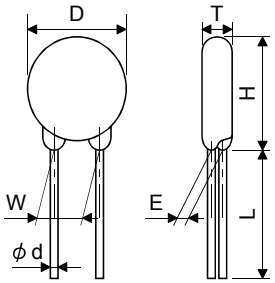

[Unit: mm]

Model	D Max.	H Max.	T Max.	E ±1.0	(Note) L min.	φd ±0.05	W ±1.0
TND20V-431K	21.5	24.5	6.4	3.3	20	0.8	10.0
TND20V-471K			6.6	3.5			

Note. For special purpose items for lead length (L), contact the manufacturer.

11.11 Earth-leakage current breaker

(1) Selection method

High-frequency chopper currents controlled by pulse width modulation flow in the AC servo circuits. Leakage currents containing harmonic contents are larger than those of the motor which is run with a commercial power supply.

Select an earth-leakage current breaker according to the following formula, and ground the servo amplifier, servo motor, etc. securely.

To minimize leakage currents, make the input and output cables as short as possible, and make the grounding cable longer than 30 cm.

Rated sensitivity current ≥ 10 • {Ig1 + Ign + Iga + K • (Ig2 + Igm)} [mA] ····· (11.1)

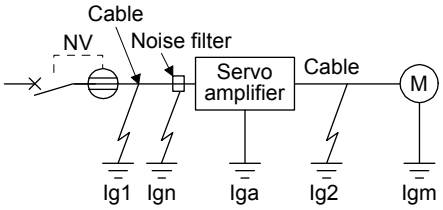

Earth-leakage current breaker		K
Type	Mitsubishi products	
Models provided with harmonic and surge reduction techniques	NV-SP NV-SW NV-CP NV-CW NV-HW	1
General models	BV-C1 NFB NV-L	3

Ig1: Leakage current on the electric channel from the earth-leakage current breaker to the input terminals of the servo amplifier (Found from Fig. 11.2.)

Ig2: Leakage current on the electric channel from the output terminals of the servo amplifier to the servo motor (Found from Fig. 11.2.)

Ign: Leakage current when a filter is connected to the input side (4.4 mA per one FR-BIF)

Iga: Leakage current of the servo amplifier (Found from table 11.3.)

Igm: Leakage current of the servo motor (Found from table 11.2.)

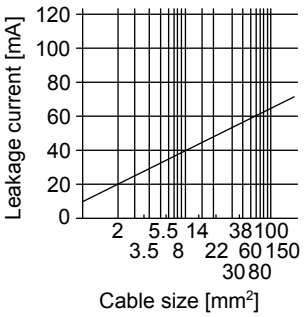

Fig. 11.2 Example of leakage current per km (Ig1, Ig2) for CV cable run in metal conduit

Table 11.2 Servo motor leakage current example (Igm)

Servo motor power [kW]	Leakage current [mA]
0.1 to 1	0.1
1.5 to 2	0.2
3	0.3

Table 11.3 Servo amplifier leakage current example (Iga)

Servo amplifier capacity [kW]	Leakage current [mA]
0.1 to 0.4	0.1
0.75 to 3	0.15

Table 11.4 Earth-leakage current breaker selection example

Servo amplifier capacity [kW]	Rated sensitivity current of earth-leakage current breaker [mA]
MR-JE-10B to MR-JE-300B	15

(2) Selection example

Indicated below is an example of selecting an earth-leakage current breaker under the following conditions.

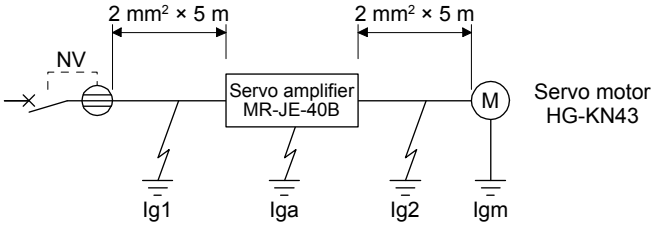

Use an earth-leakage current breaker designed for suppressing harmonics/surges.
Find the terms of equation (11.1) from the diagram.

$$Ig1 = 20 \cdot \frac{5}{1000} = 0.1 \text{ [mA]}$$

$$Ig2 = 20 \cdot \frac{5}{1000} = 0.1 \text{ [mA]}$$

Ign = 0 (not used)

Iga = 0.1 [mA]

Igm = 0.1 [mA]

Insert these values in equation (11.1).

$$Ig \geq 10 \cdot \{0.1 + 0 + 0.1 + 1 \cdot (0.1 + 0.1)\}$$
$$\geq 4 \text{ [mA]}$$

According to the result of calculation, use an earth-leakage current breaker having the rated sensitivity current (Ig) of 4.0 mA or more.
An earth-leakage current breaker having Ig of 15 mA is used with the NV-SP/SW/CP/CW/HW series.

11.12 EMC filter (recommended)

It is recommended that one of the following filters be used to comply with EN EMC directive. Some EMC filters have large in leakage current. When using an EMC filter, always use one for each servo amplifier.

(1) Combination with the servo amplifier

Servo amplifier	Recommended filter (Soshin Electric)				Mass [kg]
	Model	Rated current [A]	Rated voltage [V AC]	Leakage current [mA]	
MR-JE-10B to MR-JE-100B	(Note) HF3010A-UN	10	250	5	3.5
MR-JE-200B, MR-JE-300B	(Note) HF3030A-UN	30			5.5

Note. A surge protector is separately required to use any of these EMC filters.

(2) Connection example

(a) For 3-phase 200 V AC to 240 V AC power supply

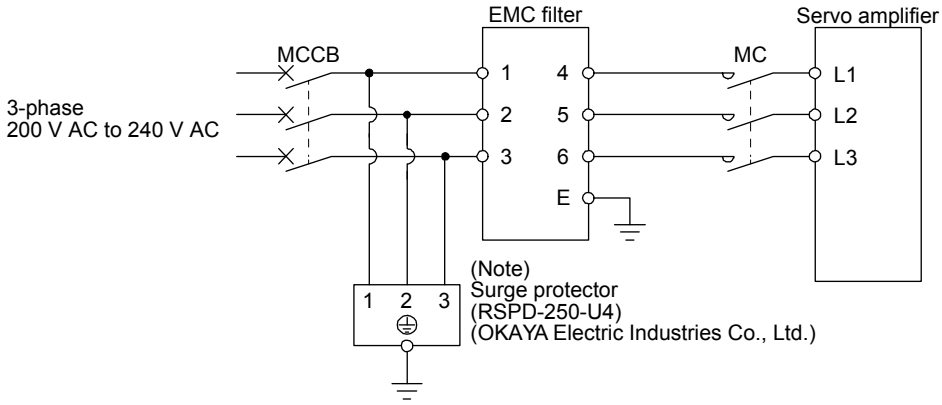

Note. The example is when a surge protector is connected.

(b) For 1-phase 200 V AC to 240 V AC power supply of MR-JE-10B to MR-JE-100B

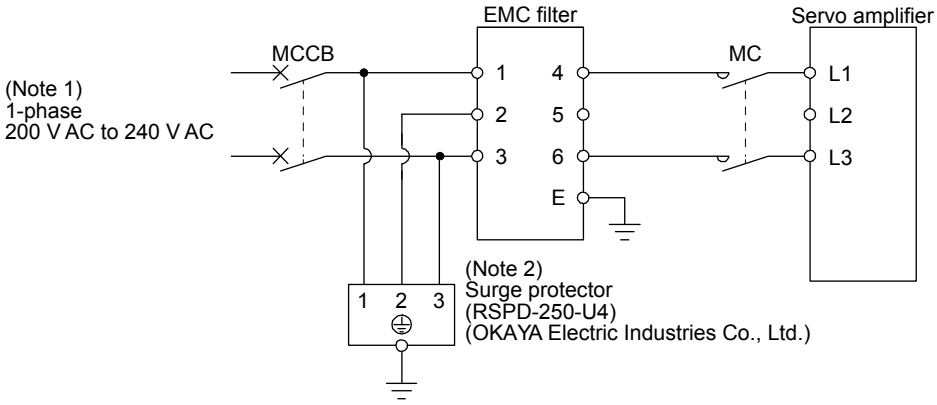

Note 1. Connect the power supply to L1 and L3. Leave L2 open.
2. The example is when a surge protector is connected.

(c) For 1-phase 200 V AC to 240 V AC power supply of MR-JE-200B

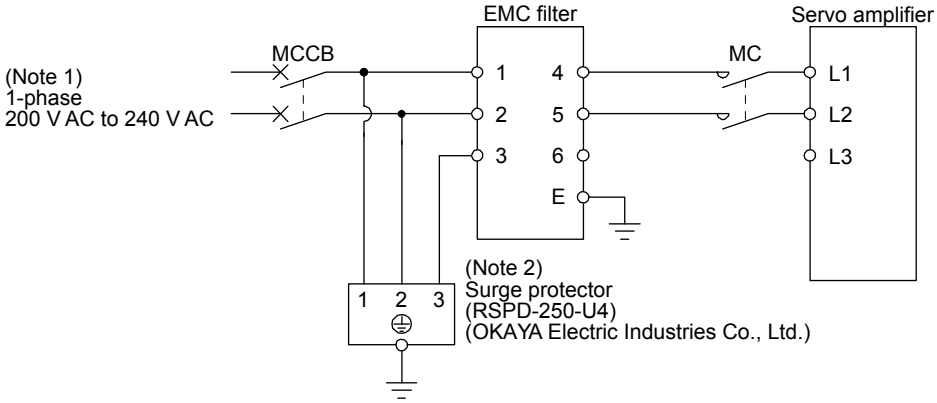

Note 1. Connect the power supply to L1 and L3. Leave L2 open.
2. The example is when a surge protector is connected.

(3) Dimensions

(a) EMC filter

HF3010A-UN

[Unit: mm]

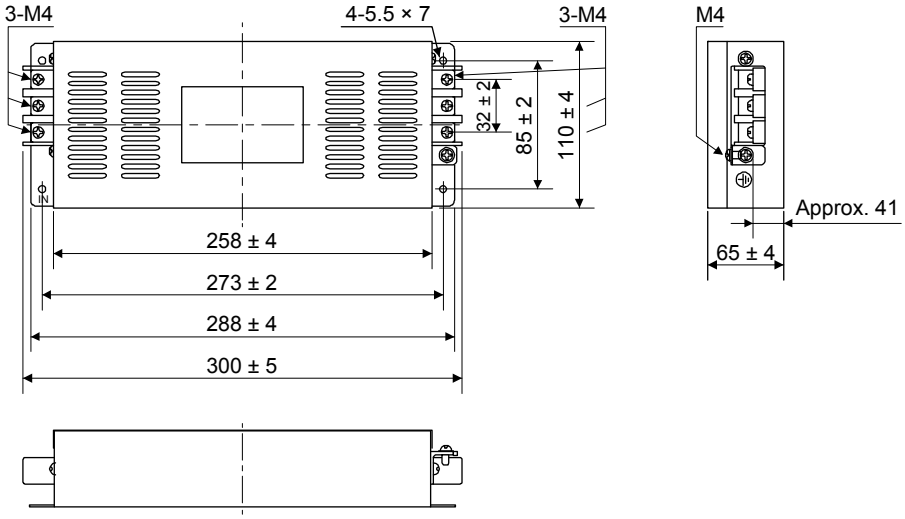

HF3030A-UN

[Unit: mm]

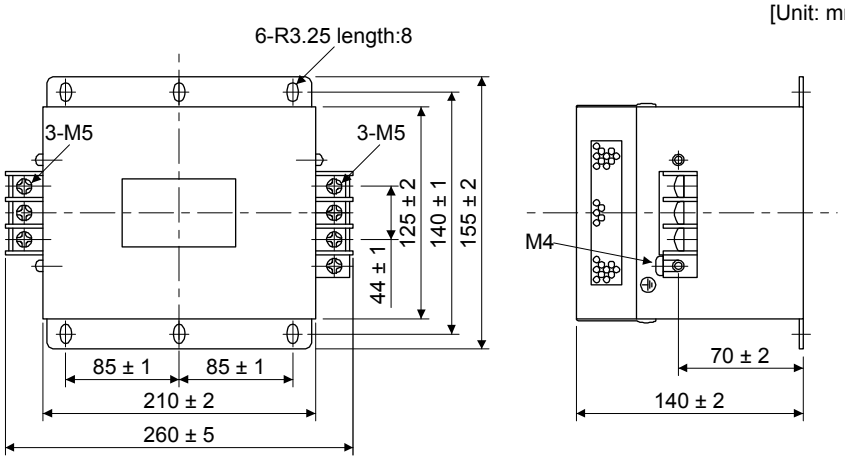

(b) Surge protector

RSPD-250-U4

[Unit: mm]

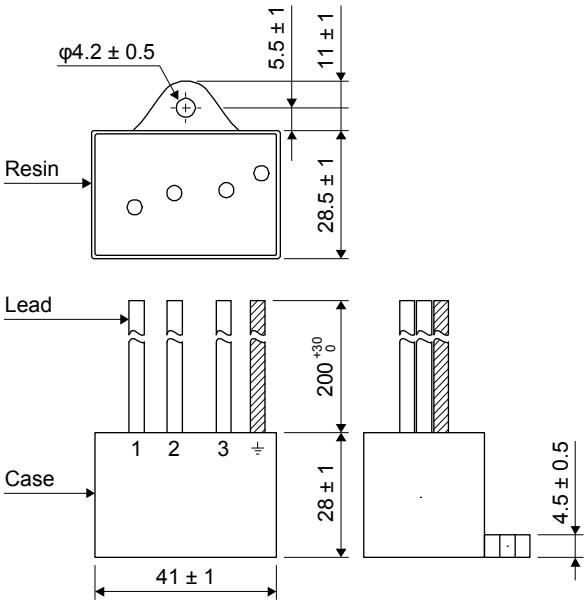

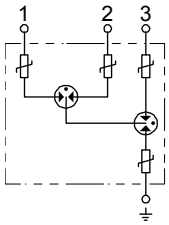

MEMO

12. ABSOLUTE POSITION DETECTION SYSTEM

⚠CAUTION	●If [AL. 25 Absolute position erased] or [AL. E3 Absolute position counter warning] has occurred, always perform home position setting again. Otherwise, it may cause an unexpected operation. ●If [AL. 25], [AL. 92], or [AL. 9F] occurs due to a failure, such as short circuit of the battery, the MR-BAT6V1 battery can become hot. Use the MR-BAT6V1 battery with a case to prevent getting burnt.

POINT

●Replacing a battery will erase the absolute position data.
●Refer to section 11.5 for the replacement procedure of the battery.
●When absolute position data is erased from the encoder, always execute home position setting before operation.

12.1 Summary

12.1.1 Features

For normal operation, the encoder consists of a detector designed to detect a position within one revolution and a cumulative revolution counter designed to detect the number of revolutions.
The absolute position detection system always detects the absolute position of the machine and keeps it battery-backed, independently of whether the servo system controller power is on or off. Therefore, once home position return is made at the time of machine installation, home position return is not needed when power is switched on thereafter.
Even at a power failure or a malfunction, the system can be easily restored.

12.1.2 Configuration

The following shows a configuration of the absolute position detection system. Refer to section 11.5 for the connection of the battery.

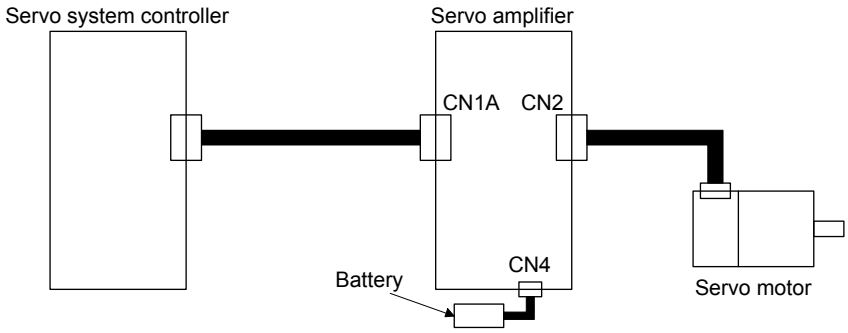

12.1.3 Parameter setting

Set "_ _ _ 1" in [Pr. PA03] to enable the absolute position detection system.

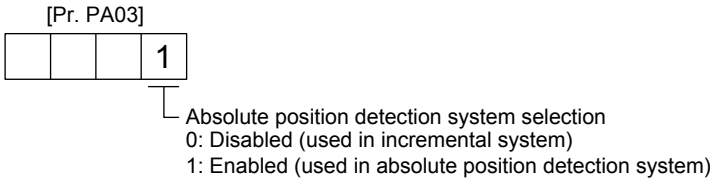

12.1.4 Confirmation of absolute position detection data

You can check the absolute position data with MR Configurator2. Choose "Monitor" and "ABS Data Display" to open the absolute position data display screen.

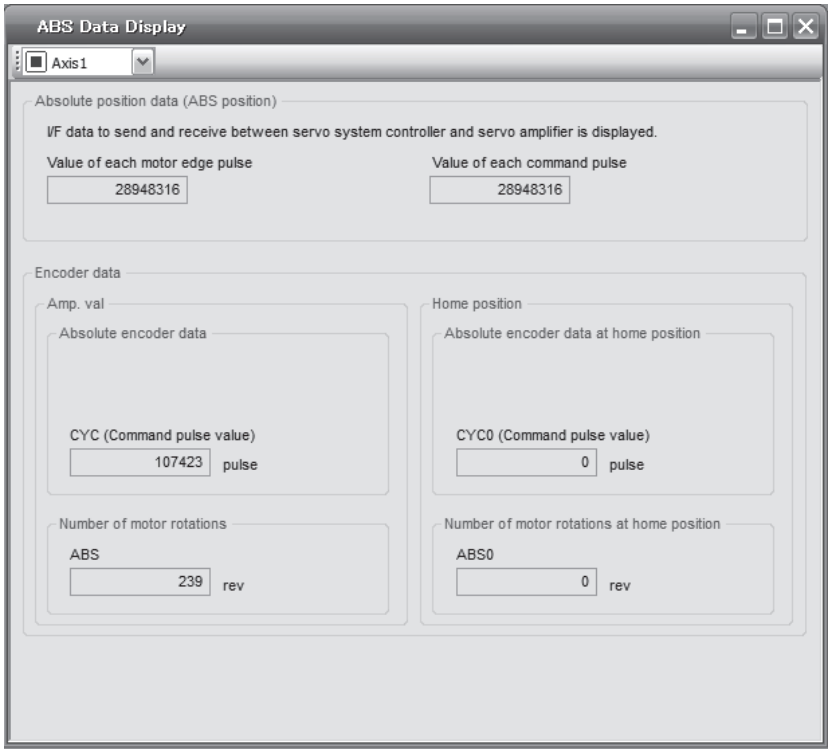

12.2 Battery

12.2.1 Using the MR-BAT6V1SET-A battery

(1) Configuration diagram

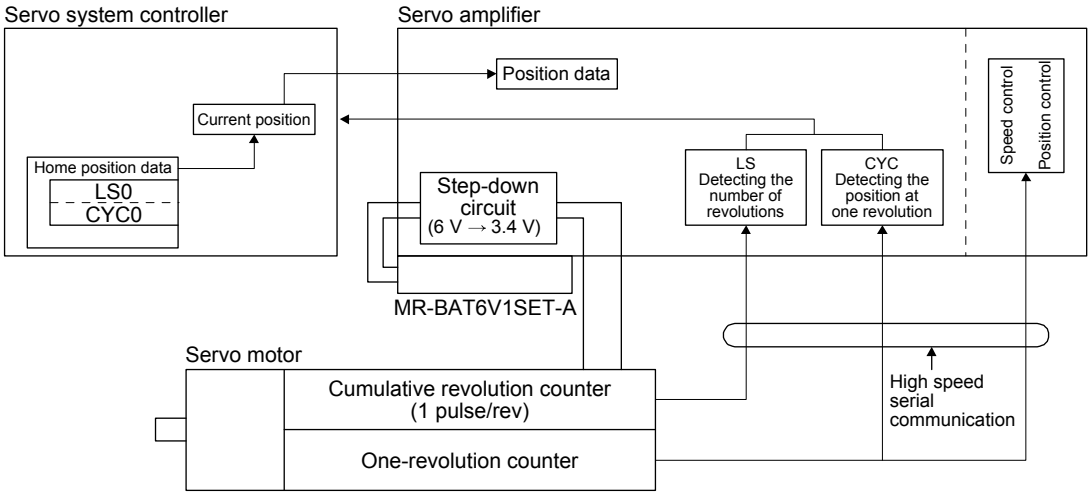

(2) Specifications

(a) Specification list

Item	Description
System	Electronic battery backup type
Maximum revolution range	Home position ± 32767 rev.
(Note 1) Maximum speed at power failure [r/min]	6000 (only when acceleration time until 6000 r/min is 0.2 s or longer)
(Note 2) Battery backup time	Approximately 20,000 hours (equipment power supply: off, ambient temperature: 20 °C) Approximately 29,000 hours (power-on time ratio: 25%, ambient temperature: 20 °C) (Note 3)

Note 1. Maximum speed available when the shaft is rotated by external force at the time of power failure or the like. Also, if power is switched on at the servo motor speed of 3000 r/min or higher, position mismatch may occur due to external force or the like.

2. The data-holding time by the battery using MR-BAT6V1SET-A. Replace the batteries within three years since the operation start regardless of the power supply of the servo amplifier on/off. If the battery is used out of specification, [AL. 25 Absolute position erased] may occur.

3. The power-on time ratio 25% is equivalent to 8 hours power on for a weekday and off for a weekend.

12.2.2 Using the MR-BT6VCASE battery case

POINT

- One MR-BT6VCASE can hold the absolute position data of up to 8-axis servo motors.
- Always install five MR-BAT6V1 batteries to MR-BT6VCASE.

(1) Configuration diagram

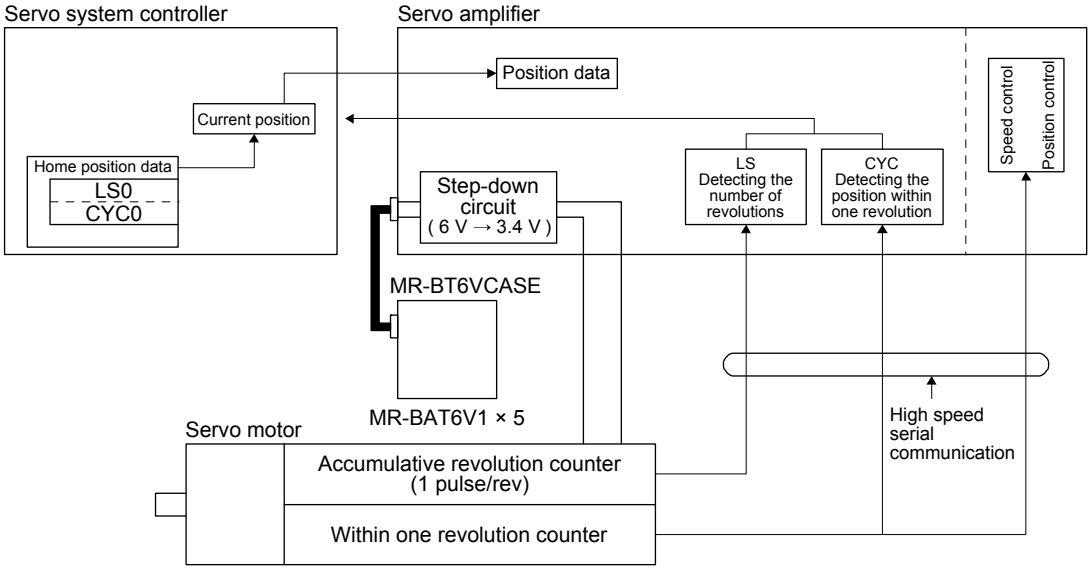

(2) Specification list

Item	Description
System	Electronic battery backup type
Maximum revolution range	Home position ± 32767 rev.
(Note 1) Maximum speed at power failure [r/min]	6000 (only when acceleration time until 6000 r/min is 0.2 s or longer)
(Note 2) Battery backup time	Approximately 40,000 hours/2 axes or less, 30,000 hours/3 axes, or 10,000 hours/8 axes (equipment power supply: off, ambient temperature: 20 °C) Approximately 55,000 hours/2 axes or less, 38,000 hours/3 axes, or 15,000 hours/8 axes (power-on time ratio: 25%, ambient temperature: 20 °C) (Note 4)

Note 1. Maximum speed available when the shaft is rotated by external force at the time of power failure or the like. Also, if power is switched on at the servo motor speed of 3000 r/min or higher, position mismatch may occur due to external force or the like.

2. The data-holding time by five MR-BAT6V1 batteries. The battery life varies depending on the number of target axes (including axis for using in the incremental system). Replace the batteries within three years since the operation start regardless of the power supply of the servo amplifier on/off. If the battery is used out of specification, [AL. 25 Absolute position erased] may occur.

3. The power-on time ratio 25% is equivalent to 8 hours power on for a weekday and off for a weekend.

App. 1 Peripheral equipment manufacturer (for reference)

Names given in the table are as of November 2014.

Manufacturer	Contact information
NEC TOKIN	NEC TOKIN Corporation
Kitagawa Industries	Kitagawa Industries Co., Ltd.
JST	J.S.T. Mfg. Co., Ltd.
Junkosha	Toa Electric Industrial Co. Ltd., Nagoya Branch
3M	3M
SEIWA ELECTRIC	Seiwa Electric Mfg. Co. Ltd.
Soshin Electric	Soshin Electric Co., Ltd.
TDK	TDK Corporation
Molex	Molex

App. 2 Handling of AC servo amplifier batteries for the United Nations Recommendations on the Transport of Dangerous Goods

United Nations Recommendations on the Transport of Dangerous Goods Rev. 15 (hereinafter Recommendations of the United Nations) has been issued. To reflect this, transport regulations for lithium metal batteries are partially revised in the Technical Instruction (ICAO-TI) by the International Civil Aviation Organization (ICAO) and the International Maritime Dangerous Goods Code (IMDG Code) by the International Maritime Organization (IMO).
To comply the instruction and code, we have modified the indication on the package for general-purpose AC servo batteries.
The above change will not affect the function and performance of the product.

(1) Target model
  (a) Battery (cell)

Model	Option model
ER6	MR-J3BAT
ER17330	MR-BAT
	A6BAT

  (b) Battery unit (assembled)

Model	Option model
ER17330	MR-J2M-BT
CR17335A	MR-BAT6V1
	MR-BAT6V1SET
	MR-BAT6V1BJ
	MR-BAT6V1SET-A

(2) Purpose
  Safer transportation of lithium metal batteries.

(3) Change in regulations

The following points are changed for lithium metal batteries transportation by sea or air due to Recommendations of the United Nations Rev. 15 and ICAO-TI 2009-2010 edition. For lithium metal batteries, cells are classified as UN3090, and batteries contained in or packed with equipment are classified as UN3091.

(a) A package containing 24 cells or 12 batteries or less that are not contained in equipment are no longer exempt from the following: attachment of a handling label, submission of the Shipper's Declaration for Dangerous Goods, and a 1.2 m drop test.

(b) A battery handling label (size: 120 mm × 110 mm) is required. Emergency telephone number must be filled out in the additional handling information of the Shipper's Declaration for Dangerous Goods.

(c) New handling label design containing battery illustration must be used. (only air transportation)

Figure. Example of Mitsubishi Label with Battery Illustration

(4) Action taken by Mitsubishi

The following caution will be added to the packages of the target batteries.
"Containing lithium metal battery. Regulations apply for transportation."

(5) Transportation precaution for customers

For sea or air transportation, attaching the handling label (figure) and the Shipper's Declaration for Dangerous Goods are required to the package of a Mitsubishi cell or battery. In addition, attaching them to the outer package containing several packages of Mitsubishi cells or batteries is also required. Please attach the documentations in the specified design to the packages and the outer packages.

App. 3 Symbol for the new EU Battery Directive

Symbol for the new EU Battery Directive (2006/66/EC) that is plastered to general-purpose AC servo battery is explained here.

Note. This symbol mark is for EU countries only.

This symbol mark is according to the directive 2006/66/EC Article 20 Information for end-users and Annex II.
Your MITSUBISHI ELECTRIC product is designed and manufactured with high quality materials and components which can be recycled and/or reused.
This symbol means that batteries and accumulators, at their end-of-life, should be disposed of separately from your household waste.
If a chemical symbol is printed beneath the symbol shown above, this chemical symbol means that the battery or accumulator contains a heavy metal at a certain concentration.
This will be indicated as follows.
Hg: mercury (0.0005%), Cd: cadmium (0.002%), Pb: lead (0.004%)
In the European Union there are separate collection systems for used batteries and accumulators. Please, dispose of batteries and accumulators correctly at your local community waste collection/recycling centre.
Please, help us to conserve the environment we live in!

App. 4 Compliance with global standards

App. 4.1 About safety

This section explains safety of users and machine operators. Please read the section carefully before mounting the equipment.

App. 4.1.1 Professional engineer

Only professional engineers should mount MR-JE servo amplifiers.
Here, professional engineers are persons who took a proper engineering training or qualified persons who are engaged in electrical equipment.
Check if applicable technical training is available at your local Mitsubishi Electric office. Contact your local sales office for schedules and locations.

App. 4.1.2 Applications of the devices

MR-JE servo amplifiers comply with the following standards.
IEC/EN 61800-5-1, IEC/EN 61800-3

App. 4.1.3 Correct use

Always use the MR-JE servo amplifiers within specifications (voltage, temperature, etc. Refer to section 1.3 for details.). Mitsubishi Electric Co. accepts no claims for liability if the equipment is used in any other way or if modifications are made to the device, even in the context of mounting and installation.

⚠WARNING ●It takes 15 minutes for capacitor discharging. Do not touch the unit and terminals immediately after power off.

(1) Peripheral device and power wiring
The followings are selected based on IEC/EN 61800-5-1, UL 508C, and CSA C22.2 No.14.

(a) Local wiring
The following table shows the stranded wire sizes [AWG] symbols rated at 75 °C/60 °C.

Table. Recommended wires

Servo amplifier (Note 3)	75 °C/60 °C stranded wire [AWG]		
	L1/L2/L3/⏚ (Note 2)	P+/C	U/V/W/⏚ (Note 1, 2)
MR-JE-10_/MR-JE-20_/MR-JE-40_/MR-JE-70_/MR-JE-100_ (T)/ MR-JE-200_/MR-JE-300_	14/14	14/14	14/14
MR-JE-200_ (S)	12/12		

Note 1. Select wire sizes depending on the rated output of the servo motors. The values in the table are sizes based on rated output of the servo amplifiers.
2. The following shows the PE terminal specifications of the servo amplifier.
Screw size: M4
Tightening torque: 1.2 [N•m]
Recommended crimp terminals: R2-4 (Manufactured by JST)
Crimping tool: YPT-60-21 (Manufactured by JST)
3. "(S)" means 1-phase 200 V AC power input and "(T)" means 3-phase 200 V AC power input in the table.

(b) Selection example of MCCB and fuse

Use T class fuses or molded-case circuit breaker (UL489 Listed MCCB) as the following table. The T class fuses and molded-case circuit breakers in the table are selected examples based on rated I/O of the servo amplifiers. When you select a smaller capacity servo motor to connect it to the servo amplifier, you can also use smaller capacity T class fuses or molded-case circuit breaker than ones in the table. For selecting ones other than Class T fuses and molded-case circuit breakers below, refer to section 11.7.

Servo amplifier (Note)	Molded-case circuit breaker (240 V AC)	Fuse (300 V)
MR-JE-10_/MR-JE-20_/MR-JE-40_/MR-JE-70_ (T)	NF50-SWU-5A (50 A frame 5 A)	10 A
MR-JE-70_ (S)/MR-JE-100_ (T)	NF50-SWU-10A (50 A frame 10 A)	15 A
MR-JE-200_ (T)/MR-JE-300_	NF50-SWU-15A (50 A frame 15 A)	30 A
MR-JE-100_ (S)	NF50-SVFU-15A (50 A frame 15 A)	30 A
MR-JE-200_ (S)	NF50-SVFU-20A (50 A frame 20 A)	40 A

Note. "(S)" means 1-phase 200 V AC power input and "(T)" means 3-phase 200 V AC power input in the table.

(c) Power supply

This servo amplifier can be supplied from star-connected supply with grounded neutral point of overvoltage category III set forth in IEC/EN 60664-1. However, when you use the neutral point for single phase supply, a reinforced insulating transformer is required in the power input section. For the interface power supply, use an external 24 V DC power supply with reinforced insulation on I/O terminals.

(d) Grounding

To prevent an electric shock, always connect the protective earth (PE) terminal (marked ⏚) of the servo amplifier to the protective earth (PE) of the cabinet. Do not connect two grounding cables to the same protective earth (PE) terminal. Always connect cables to the terminals one-to-one.
If using a leakage circuit breaker, always ground the protective earth (PE) terminal of the servo amplifier to prevent an electric shock. This product can cause a d.c. current in the protective earthing conductor. Where a residual current-operated protective (RCD: earth-leakage current breaker) device is used for protection in case of direct or indirect contact, only an RCD of Type B is allowed on the supply side of this product.

(2) EU compliance

The MR-JE servo amplifiers are designed to comply with the following directions to meet requirements for mounting, using, and periodic technical inspections: EMC directive (2004/108/EC), and Low-voltage directive (2006/95/EC).

(a) EMC requirement

MR-JE servo amplifiers comply with category C3 in accordance with IEC/EN 61800-3. Install an EMC filter and surge protector on the primary side of the servo amplifier. As for I/O signal wires (max. length 10 m) and encoder cables (max. length 50 m), use shielded wires and ground the shields. However, when the encoder cable length is longer than 30 m for MR-JE-70_ and MR-JE-100_, set a radio noise filter (FR-BIF) to the input power supply side of the servo amplifier. The following shows recommended products.

EMC filter: Soshin Electric HF3000A-UN series

Surge protector: Okaya Electric Industries RSPD-250-U4 series

Radio noise filter: Mitsubishi Electric FR-BIF

MR-JE Series are not intended to be used on a low-voltage public network which supplies domestic premises; radio frequency interference is expected if used on such a network. The installer shall provide a guide for Installation and use, including recommended mitigation devices.

(b) For Declaration of Conformity (DoC)

Hereby, MITSUBISHI ELECTRIC EUROPE B.V., declares that the servo amplifiers are in compliance with the necessary requirements and standards (2004/108/EC and 2006/95/EC). For the copy of Declaration of Conformity, contact your local sales office.

(3) USA/Canada compliance

This servo amplifier is designed in compliance with UL 508C and CSA C22.2 No.14.

(a) Installation

The minimum cabinet size is 150% of MR-JE servo amplifier's volume. Also, design the cabinet so that the ambient temperature in the cabinet is 55 °C or less. The servo amplifier must be installed in the metal cabinet. Additionally, mount the servo amplifier on a cabinet that the protective earth based on the standard of IEC/EN 60204-1 is correctly connected. For environment, the units should be used in open type (UL 50) and overvoltage category shown in table in section 8.1. The servo amplifier needs to be installed at or below of pollution degree 2. For connection, use copper wires.

(b) Short-circuit current rating (SCCR)

Suitable For Use On A Circuit Capable Of Delivering Not More Than 100 kA rms Symmetrical Amperes, 500 Volts Maximum.

(c) Overload protection characteristics

The MR-JE servo amplifiers have solid-state servo motor overload protection. (It is set on the basis (full load current) of 120% rated current of the servo amplifier.)

(d) Over-temperature protection for motor
Motor Over temperature sensing is not provided by the drive.
Integral thermal protection(s) is necessary for motor and refer to appendix. 4.3 for the proper connection.

(e) Branch circuit protection
For installation in United States, branch circuit protection must be provided, in accordance with the National Electrical Code and any applicable local codes.
For installation in Canada, branch circuit protection must be provided, in accordance with the Canada Electrical Code and any applicable provincial codes.

(4) South Korea compliance
This product complies with the Radio Wave Law (KC mark). Please note the following to use the product.
이 기기는 업무용 (A급) 전자파적합기기로서 판 매자 또는 사용자는 이 점을 주의하시기 바라며, 가정외의 지역에서 사용하는 것을 목적으 로 합니다.
(The product is for business use (Class A) and meets the electromagnetic compatibility requirements. The seller and the user must note the above point, and use the product in a place except for home.)

App. 4.1.4 General cautions for safety protection and protective measures

Observe the following items to ensure proper use of the MELSERVO MR-JE servo amplifiers.

(1) For installing systems, only qualified personnel and professional engineers should perform.

(2) When mounting, installing, and using the MR-JE servo amplifier, always observe standards and directives applicable in the country.

App. 4.1.5 Disposal

Disposal of unusable or irreparable devices should always occur in accordance with the applicable country-specific waste disposal regulations. (Example: European Waste 16 02 14)

App. 4.1.6 Lithium battery transportation

To transport lithium batteries, take actions to comply with the instructions and regulations such as the United Nations (UN), the International Civil Aviation Organization (ICAO), and the International Maritime Organization (IMO).
The batteries (MR-BAT6V1SET-A and MR-BAT6V1) are assembled batteries from two batteries (lithium metal battery CR17335A) which are not subject to the dangerous goods (Class 9) of the UN Recommendations.

App. 4.2 Mounting/dismounting

Installation direction and clearances

⚠CAUTION	●The devices must be installed in the specified direction. Not doing so may cause a malfunction. ●Mount the servo amplifier on a cabinet which meets IP54 in the correct vertical direction to maintain pollution degree 2.

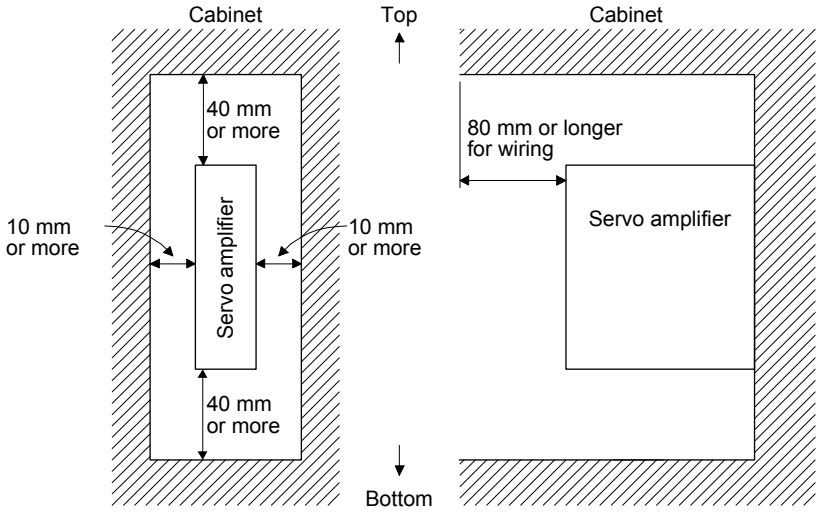

App. 4.3 Electrical Installation and configuration diagram

⚠WARNING	●Turn off the molded-case circuit breaker (MCCB) to avoid electrical shocks or damages to the product before starting the installation or wiring.

⚠CAUTION	●Connecting a servo motor for different axis to U, V, W, or CN2 of the servo amplifier may cause a malfunction.

The following shows representative configuration examples to conform to the IEC/EN/UL/CSA standards.

(1) 3-phase input

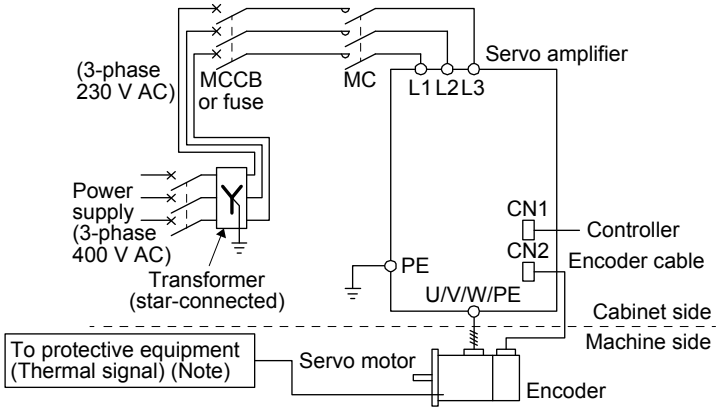

Note. Please use a thermal sensor, etc. for thermal protection of the servo motor.

(2) 1-phase input

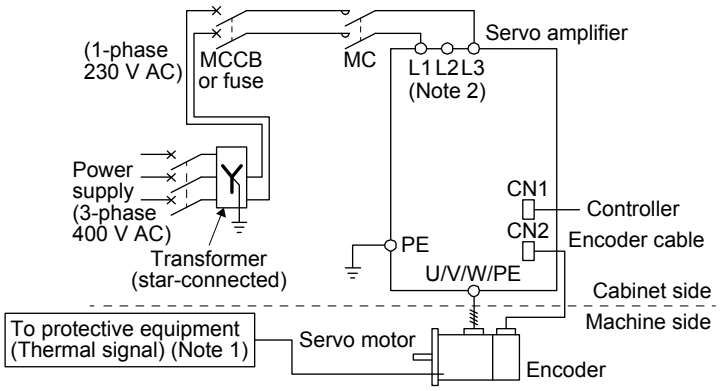

Note 1. Please use a thermal sensor, etc. for thermal protection of the servo motor.
2. For the MR-JE-200_ servo amplifiers, connect the power supply to L1 and L2. Leave L3 open.

The control circuit connectors described by rectangles are safely separated from the main circuits described by circles.
The connected motors will be limited as follows.

HG-KN/HG-SN series servo motors (Mfg.: Mitsubishi Electric)

App. 4.4 Signals

App. 4.4.1 Signal

The following shows CN1 connector signals of MR-JE-10A as a typical example.

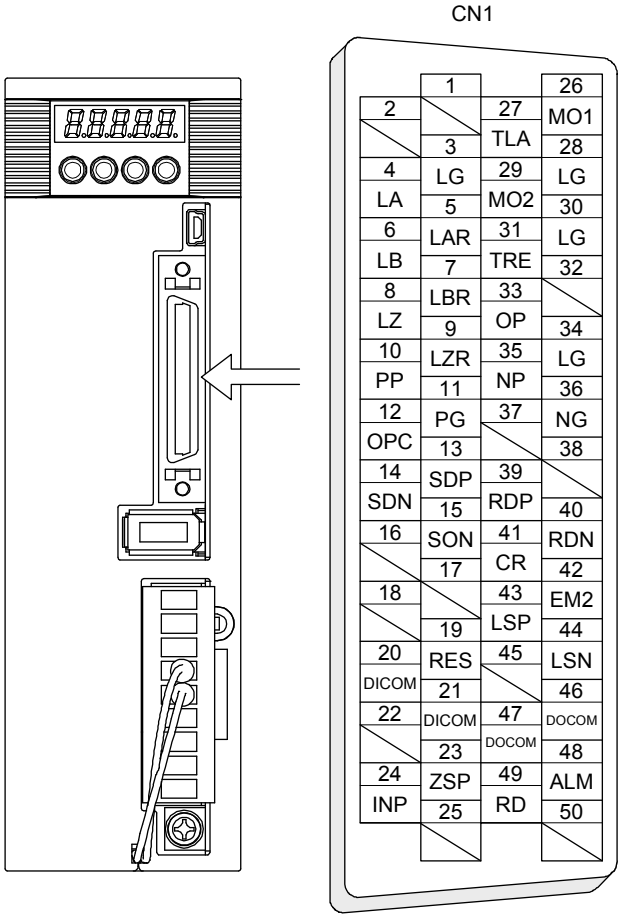

This is in position control mode.

App. 4.4.2 I/O device

The following shows typical I/O devices of MR-JE-_A. For the other devices, refer to each servo amplifier instruction manual.

Input device

Symbol	Device	Connector	Pin No.
SON	Servo-on	CN1	15
RES	Reset		19
CR	Clear		41
EM2	Forced stop 2		42
LSP	Forward rotation stroke end		43
LSN	Reverse rotation stroke end		44

Output device

Symbol	Device	Connector	Pin No.
ZSP	Zero speed detection	CN1	23
INP	In-position		24
ALM	Malfunction		48
RD	Ready		49

Power supply

Symbol	Device	Connector	Pin No.
DICOM	Digital I/F power supply input	CN1	20, 21
DOCOM	Digital I/F common		46, 47
SD	Shield		Plate

App. 4.5 Maintenance and service

⚠WARNING ●To avoid an electric shock, only qualified personnel should attempt inspections. For repair and parts replacement, contact your local sales office.

App. 4.5.1 Inspection items

It is recommended that the following points periodically be checked.

(1) Check for loose screws on the protective earth (PE) terminal. Retighten any loose screws. (tightening torque: 1.2 N•m)

(2) Servo motor bearings, brake section, etc. for unusual noise.

(3) Check the cables and the like for scratches or cracks. Perform periodic inspection according to operating conditions.

(4) Check that the connectors are securely connected to the servo motor.

(5) Check that the wires are not coming out from the connector.

(6) Check for dust accumulation on the servo amplifier.

(7) Check for unusual noise generated from the servo amplifier.

(8) Check the servo motor shaft and coupling for connection.

App. 4.5.2 Parts having service lives

Service lives of the following parts are listed below. However, the service lives vary depending on operation and environment. If any fault is found in the parts, they must be replaced immediately regardless of their service lives. For parts replacement, please contact your local sales office.

Part name	Life guideline
Smoothing capacitor	(Note 3) 10 years
Relay	Number of power-on, forced stop, and controller forced stop times: 100 000 times
Cooling fan	50,000 hours to 70,000 hours (7 years to 8 years)
(Note 1) Battery backup time	Approximately 20,000 hours (equipment power supply: off, ambient temperature: 20 °C)
(Note 2) Battery life	5 years from date of manufacture

Note 1. The time is for using MR-BAT6V1SET-A. For details and other battery backup time, refer to chapter 12.
2. Quality of the batteries degrades by the storage condition. The battery life is 5 years from the production date regardless of the connection status.
3. The characteristic of smoothing capacitor is deteriorated due to ripple currents, etc. The life of the capacitor greatly depends on ambient temperature and operating conditions. The capacitor will reach the end of its life in 10 years of continuous operation in normal air-conditioned environment (40 °C surrounding air temperature or less).

App. 4.6 Transportation and storage

⚠CAUTION

- Transport the products correctly according to their mass.
- Stacking in excess of the limited number of product packages is not allowed.
- For detailed information on the battery's transportation and handing refer to app. 2 and app. 3.
- Install the product in a load-bearing place of servo amplifier and servo motor in accordance with instruction manual.
- Do not get on or put heavy load on the equipment.
- Do not hold the lead of the built-in regenerative resistor when carrying the servo amplifier.

When you keep or use it, please fulfill the following environment.

Item		Environment
Ambient temperature	Operation [°C]	0 to 55 Class 3K3 (IEC/EN 60721-3-3)
	Transportation (Note) [°C]	-20 to 65 Class 2K4 (IEC/EN 60721-3-2)
	Storage (Note) [°C]	-20 to 65 Class 1K4 (IEC/EN 60721-3-1)
Ambient humidity	Operation, transportation, storage	5 %RH to 90 %RH
Vibration resistance	Test condition	10 Hz to 57 Hz with constant amplitude of 0.075 mm 57 Hz to 150 Hz with constant acceleration of 9.8 m/s^2 to IEC/EN 61800-5-1 (Test Fc of IEC 60068-2-6)
	Operation	5.9 m/s^2
	Transportation (Note)	Class 2M3 (IEC/EN 60721-3-2)
	Storage	Class 1M2 (IEC/EN 60721-3-2)
Pollution degree		2
IP rating		IP20 (IEC/EN 60529)
		Open type (UL 50)
Altitude	Operation, storage	Max. 1000 m above sea level
	Transportation	Max. 10000 m above sea level

Note. In regular transport packaging

App. 4.7 Technical data

App. 4.7.1 MR-JE servo amplifier

Item		MR-JE-10_/MR-JE-20_/MR-JE-40_/ MR-JE-70_/MR-JE-100_/MR-JE-200_	MR-JE-300_
Power supply	Line voltage	3-phase or 1-phase 200 V AC to 240 V AC, 50 Hz /60 Hz	3-phase 200 V AC to 240 V AC, 50 Hz/60 Hz
	Interface (SELV)	24 V DC, (required current capacity: MR-JE-_A, 300 mA; MR-JE-_B, 100 mA)	
Control method		Sine-wave PWM control, current control method	
Pollution degree		2 (IEC/EN 60664-1)	
Overvoltage category		1-phase 200 V AC: II (IEC/EN 60664-1), 3-phase 200 V AC: III (IEC/EN 60664-1)	
Protection class		I (IEC/EN 61800-5-1)	
Short-circuit current rating (SCCR)		100 kA	

App. 4.7.2 Servo amplifier dimensions

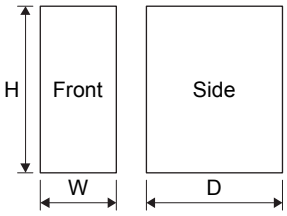

Servo amplifier	Variable dimension table [mm]			Mass [kg]
	W	H	D	
MR-JE-10_/MR-JE-20_/MR-JE-40_	50	168	135	0.8
MR-JE-70_/MR-JE-100_	70	168	185	1.5
MR-JE-200_/MR-JE-300_	90	168	195	2.1

App. 4.7.3 Mounting hole

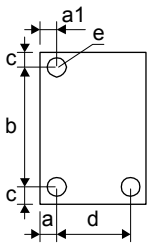

Servo amplifier	Variable dimensions [mm]					Screw size
	a	a1	b	c	d	e
MR-JE-10_/MR-JE-20_/MR-JE-40_	6	6	156 ± 0.5	6		M5
MR-JE-70_/MR-JE-100_	22	22	156 ± 0.5	6	42 ± 0.3	M5
MR-JE-200_/MR-JE-300_	6	45	156 ± 0.5	6	78 ± 0.3	M5

App. 5 SSCNET III cable (SC-J3BUS_M-C) manufactured by Mitsubishi Electric System & Service

POINT

- For the details of the SSCNET III cables, contact your local sales office.
- Do not look directly at the light generated from the CN1A connector and CN1B connector of servo amplifier or the end of SSCNET III cable. The light can be a discomfort when it enters the eye.

The cable is available per 1 m up to 100 m. The number of the length (1 to 100) will be in the underscore in the cable model.

Cable model	Cable length	Bending life	Application and remark
	1 m to 100 m		
SC-J3BUS_M-C	1 to 100	Ultra-long bending life	Using long distance cable

App. 6 Low-voltage directive

MR-JE series servo amplifiers are certificated in compliance with Low-voltage directive. The following shows a certificate by the Certification Body.

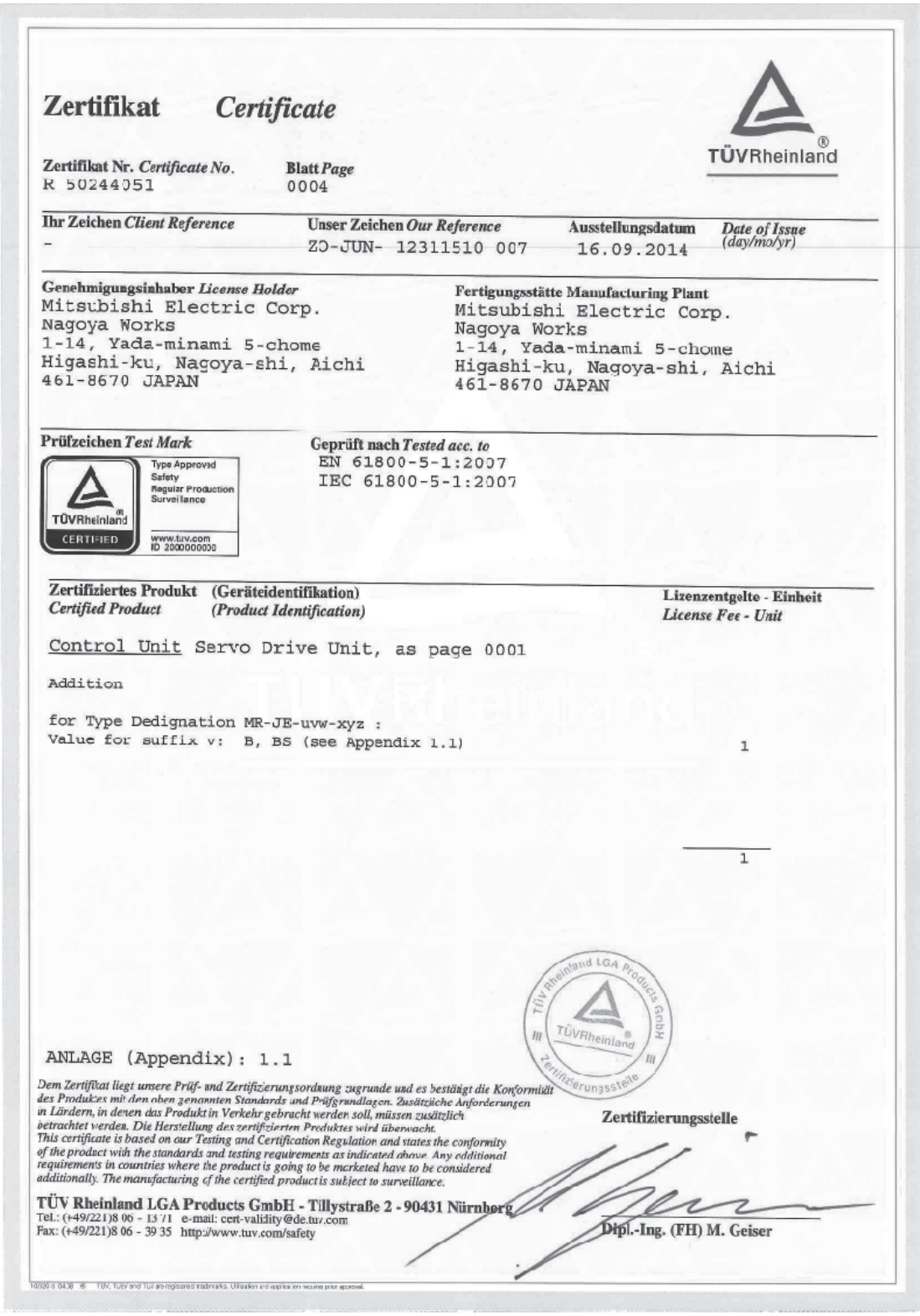

Zertifikat *Certificate*

TÜVRheinland

Zertifikat Nr. *Certificate No.* R 50244051

Blatt *Page* 0004

Ihr Zeichen *Client Reference* -

Unser Zeichen *Our Reference* ZO-JUN- 12311510 007

Ausstellungsdatum 16.09.2014 *Date of Issue (day/mo/yr)*

Genehmigungsinhaber *License Holder*
Mitsubishi Electric Corp.
Nagoya Works
1-14, Yada-minami 5-chome
Higashi-ku, Nagoya-shi, Aichi
461-8670 JAPAN

Fertigungsstätte *Manufacturing Plant*
Mitsubishi Electric Corp.
Nagoya Works
1-14, Yada-minami 5-chome
Higashi-ku, Nagoya-shi, Aichi
461-8670 JAPAN

Prüfzeichen *Test Mark*
Type Approved
Safety
Regular Production Surveillance
TÜVRheinland CERTIFIED
www.tuv.com
ID 2000000000

Geprüft nach *Tested acc. to*
EN 61800-5-1:2007
IEC 61800-5-1:2007

Zertifiziertes Produkt **(Geräteidentifikation)**
Certified Product *(Product Identification)*

Lizenzentgelte - Einheit
License Fee - Unit

Control Unit Servo Drive Unit, as page 0001

Addition

for Type Dedignation MR-JE-uvw-xyz :
Value for suffix v: B, BS (see Appendix 1.1) 1

1

TÜV Rheinland LGA Products GmbH Zertifizierungsstelle

ANLAGE (Appendix): 1.1

Dem Zertifikat liegt unsere Prüf- und Zertifizierungsordnung zugrunde und es bestätigt die Konformität des Produktes mit den oben genannten Standards und Prüfgrundlagen. Zusätzliche Anforderungen in Ländern, in denen das Produkt in Verkehr gebracht werden soll, müssen zusätzlich betrachtet werden. Die Herstellung des zertifizierten Produktes wird überwacht.
This certificate is based on our Testing and Certification Regulation and states the conformity of the product with the standards and testing requirements as indicated above. Any additional requirements in countries where the product is going to be marketed have to be considered additionally. The manufacturing of the certified product is subject to surveillance.

Zertifizierungsstelle

TÜV Rheinland LGA Products GmbH - Tillystraße 2 - 90431 Nürnberg
Tel.: (+49/221)8 06 - 13 71 e-mail: cert-validity@de.tuv.com
Fax: (+49/221)8 06 - 39 35 http://www.tuv.com/safety

Dipl.-Ing. (FH) M. Geiser

Refer to section 1.6 (2) for the models shown in "(see Appendix 1.1)".

App. 7 When turning on or off the input power supply with DC power supply

App. 7.1 Connection example

For the signals or wiring that are not described in this section, refer to section 3.1.

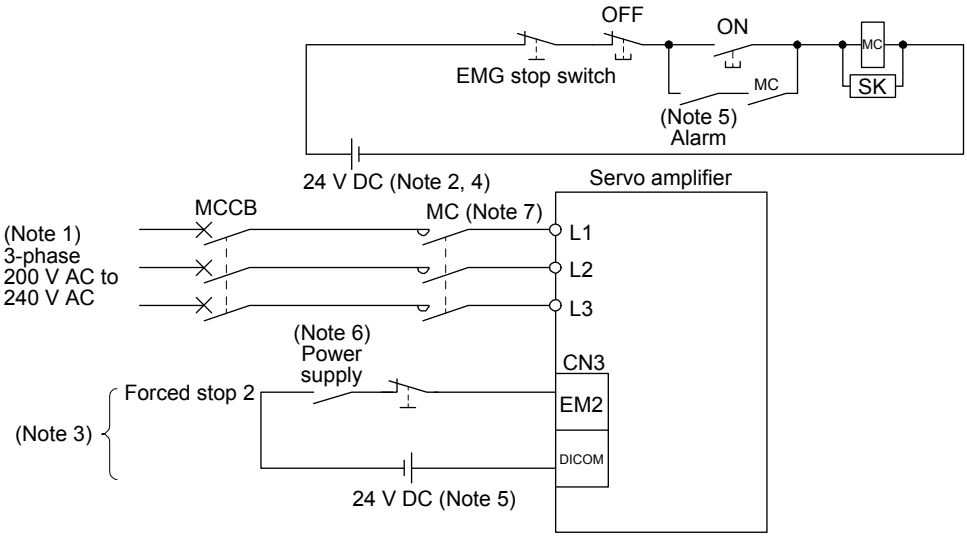

Note 1. For 1-phase 200 V AC to 240 V AC of MR-JE-10B to MR-JE-100B, connect the power supply to L1 and L3. Leave L2 open. For 1-phase 200 V AC to 240 V AC of MR-JE-200B, connect the power supply to L1 and L2. Leave L3 open. MR-JE-300B is not applicable to 1-phase 200 V AC to 240 V AC power supply.

2. Do not use the 24 V DC interface power supply for magnetic contactor. Always use the power supply designed exclusively for the magnetic contactor.
3. This diagram is for the sink I/O interface. For source I/O interface, refer to section 3.8.3.
4. Controlling the on switch or off switch with DC power supply satisfies the requirements of IEC/EN 60204-1.
5. Configure the power supply circuit that turns off the magnetic contactor after an alarm occurs on the controller side.
6. Configure a circuit to turn off EM2 when the power is turned off to prevent an unexpected restart of the servo amplifier.
7. Use a magnetic contactor with an operation delay time (interval since a current is applied to the coil until the contact closes) of 80 ms or shorter. Depending on the power supply voltage and operation pattern, bus voltage can decrease. This can shift the mode to the dynamic brake deceleration during forced stop deceleration. When dynamic brake deceleration is not required, slow the time to turn off the magnetic contactor.

App. 7.2 Magnetic contactor

Use a magnetic contactor with an operation delay time (interval since a current is applied to the coil until the contact closes) of 80 ms or shorter.

Servo amplifier	Magnetic contactor
MR-JE-10B	SD-N11
MR-JE-20B	
MR-JE-40B	
MR-JE-70B	
MR-JE-100B	
MR-JE-200B	SD-N21
MR-JE-300B	

App. 8 When using the hot line forced stop function in combination with MR-J4-_B servo amplifier

At factory setting, MR-J4-_B servo amplifiers do not decelerate to a stop by the hot line forced stop function if an alarm occurs in an MR-JE-_B servo amplifier.
To decelerate MR-J4-_B servo amplifiers to a stop by the hot line forced stop function, enable the deceleration to a stop selection with [Pr. PA27].
If an alarm occurs in the MR-J4-_B servo amplifier, MR-JE-_B and MR-J4-_B servo amplifiers do not decelerate to a stop by the hot line forced stop function.

<table>
<tr><th>No.</th><th>Symbol</th><th>Name and function</th><th>Initial value [unit]</th><th>Setting range</th></tr>
<tr><td>PA27</td><td>*HTL</td><td>Hot line forced stop function
<table>
<tr><th>Setting digit</th><th>Explanation</th><th>Initial value</th></tr>
<tr><td>_ _ _ x</td><td>Deceleration to a stop selection
Select enabled/disabled of deceleration to a stop for when a hot line forced stop signal is received.
0: Disabled
2: Enabled
This parameter is used by servo amplifier with software version B6 or later.</td><td>0h</td></tr>
<tr><td>_ _ x _</td><td rowspan="3">For manufacturer setting</td><td>0h</td></tr>
<tr><td>_ x _ _</td><td>0h</td></tr>
<tr><td>x _ _ _</td><td>0h</td></tr>
</table></td><td colspan="2">Refer to the "Name and function" column.</td></tr>
</table>

REVISION

*The manual number is given on the bottom left of the back cover.

Print Data	*Manual Number	Revision
Nov. 2014	SH(NA)030152-A	First edition

This manual confers no industrial property rights or any rights of any other kind, nor does it confer any patent licenses. Mitsubishi Electric Corporation cannot be held responsible for any problems involving industrial property rights which may occur as a result of using the contents noted in this manual.

© 2014 MITSUBISHI ELECTRIC CORPORATION

Country/Region	Sales office	Tel/Fax
USA	MITSUBISHI ELECTRIC AUTOMATION, INC. 500 Corporate Woods Parkway, Vernon Hills, IL 60061, U.S.A.	Tel : +1-847-478-2100 Fax : +1-847-478-2253
Mexico	MITSUBISHI ELECTRIC AUTOMATION, INC. Mexico Branch Mariano Escobedo #69, Col. Zona Industrial, Tlalnepantla Edo, C.P.54030, Mexico	Tel : +52-55-3067-7500 Fax : –
Brazil	MITSUBISHI ELECTRIC DO BRASIL COMÉRCIO E SERVIÇOS LTDA. Rua Jussara, 1750- Bloco B Anexo, Jardim Santa Cecilia, CEP 06465-070, Barueri - SP, Brasil	Tel : +55-11-4689-3000 Fax : +55-11-4689-3016
Germany	MITSUBISHI ELECTRIC EUROPE B.V. German Branch Gothaer Strasse 8, D-40880 Ratingen, Germany	Tel : +49-2102-486-0 Fax : +49-2102-486-1120
UK	MITSUBISHI ELECTRIC EUROPE B.V. UK Branch Travellers Lane, Hatfield, Hertfordshire, AL10 8XB, U.K.	Tel : +44-1707-28-8780 Fax : +44-1707-27-8695
Italy	MITSUBISHI ELECTRIC EUROPE B.V. Italian Branch Centro Direzionale Colleoni - Palazzo Sirio Viale Colleoni 7, 20864 Agrate Brianza (Milano) Italy	Tel : +39-039-60531 Fax : +39-039-6053-312
Spain	MITSUBISHI ELECTRIC EUROPE, B.V. Spanish Branch Carretera de Rubí, 76-80-Apdo. 420, 08173 Sant Cugat del Vallés (Barcelona), Spain	Tel : +34-935-65-3131 Fax : +34-935-89-1579
France	MITSUBISHI ELECTRIC EUROPE B.V. French Branch 25, Boulevard des Bouvets, F-92741 Nanterre Cedex, France	Tel : +33-1-55-68-55-68 Fax : +33-1-55-68-57-57
Czech Republic	MITSUBISHI ELECTRIC EUROPE B.V. Czech Branch Avenir Business Park, Radlicka 751/113e, 158 00 Praha5, Czech Republic	Tel : +420-251-551-470 Fax : +420-251-551-471
Poland	MITSUBISHI ELECTRIC EUROPE B.V. Polish Branchul. Krakowska 50, 32-083 Balice, Poland	Tel : +48-12-630-47-00 Fax : +48-12-630-47-01
Russia	MITSUBISHI ELECTRIC EUROPE B.V. Russian Branch St. Petersburg office Piskarevsky pr. 2, bld 2, lit “Sch”, BC “Benua”, office 720; RU-195027 St. Petersburg, Russia	Tel : +7-812-633-3497 Fax : +7-812-633-3499
Sweden	MITSUBISHI ELECTRIC EUROPE B.V. (Scandinavia) Fjelievägen 8, SE-22736 Lund, Sweden	Tel : +46-8-625-10-00 Fax : +46-46-39-70-18
Turkey	MITSUBISHI ELECTRIC TURKEY A.Ş Ümraniye Branch Şerifali Mahallesi Nutuk Sokak No:5, TR-34775 Ümraniye, İstanbul, Türkey	Tel : +90-216-526-3990 Fax : +90-216-526-3995
UAE	MITSUBISHI ELECTRIC EUROPE B.V. Dubai Branch Dubai Silicon Oasis, P.O.BOX 341241, Dubai, U.A.E.	Tel : +971-4-3724716 Fax : +971-4-3724721
South Africa	ADROIT TECHNOLOGIES 20 Waterford Office Park, 189 Witkoppen Road, Fourways, Johannesburg, South Africa	Tel : +27-11-658-8100 Fax : +27-11-658-8101
China	MITSUBISHI ELECTRIC AUTOMATION (CHINA) LTD. No.1386 Hongqiao Road, Mitsubishi Electric Automation Center, Shanghai, China	Tel : +86-21-2322-3030 Fax : +86-21-2322-3000
Taiwan	SETSUYO ENTERPRISE CO., LTD. 6F, No.105, Wugong 3rd Road, Wugu District, New Taipei City 24889, Taiwan, R.O.C.	Tel : +886-2-2299-2499 Fax : +886-2-2299-2509
Korea	MITSUBISHI ELECTRIC AUTOMATION KOREA CO., LTD. 7F-9F, Gangseo Hangang Xi-tower A, 401, Yangcheon-ro, Gangseo-Gu, Seoul 157-801, Korea	Tel : +82-2-3660-9510 Fax : +82-2-3664-8372/8335
Singapore	MITSUBISHI ELECTRIC ASIA PTE. LTD. 307, Alexandra Road, Mitsubishi Electric Building, Singapore 159943	Tel : +65-6473-2308 Fax : +65-6476-7439
Thailand	MITSUBISHI ELECTRIC FACTORY AUTOMATION (THAILAND) CO., LTD. 12th Floor, SV.City Building, Office Tower 1, No. 896/19 and 20 Rama 3 Road, Kwaeng Bangpongpang, Khet Yannawa, Bangkok 10120, Thailand	Tel : +66-2682-6522 to 6531 Fax : +66-2682-6020
Indonesia	PT. MITSUBISHI ELECTRIC INDONESIA Gedung Jaya 11th Floor, JL. MH. Thamrin No.12, Jakarta Pusat 10340, Indonesia	Tel : +62-21-3192-6461 Fax : +62-21-3192-3942
Vietnam	MITSUBISHI ELECTRIC VIETNAM COMPANY LIMITED Unit 01-04, 10th Floor, Vincom Center, 72 Le Thanh Ton Street, District 1, Ho Chi Minh City, Vietnam	Tel : +84-8-3910-5945 Fax : +84-8-3910-5947
India	MITSUBISHI ELECTRIC INDIA PVT. LTD. Pune Branch Emerald House, EL -3, J Block, M.I.D.C Bhosari, Pune - 411026, Maharashtra, India	Tel : +91-20-2710-2000 Fax : +91-20-2710-2100
Australia	MITSUBISHI ELECTRIC AUSTRALIA PTY. LTD. 348 Victoria Road, P.O. Box 11, Rydalmere, N.S.W 2116, AustraliaTel/	Tel : +61-2-9684-7777 Fax : +61-2-9684-7245

MELSERVO is a trademark or registered trademark of Mitsubishi Electric Corporation in Japan and/or other countries.
Microsoft, Windows, Internet Explorer, and Windows Vista are registered trademarks or trademarks of Microsoft Corporation in the United States, Japan, and/or other countries.
Intel, Pentium, and Celeron are trademarks of Intel Corporation in the United States and/or other countries.
All other product names and company names are trademarks or registered trademarks of their respective companies.

Warranty

1. Warranty period and coverage

We will repair any failure or defect hereinafter referred to as "failure" in our FA equipment hereinafter referred to as the "Product" arisen during warranty period at no charge due to causes for which we are responsible through the distributor from which you purchased the Product or our service provider. However, we will charge the actual cost of dispatching our engineer for an on-site repair work on request by customer in Japan or overseas countries. We are not responsible for any on-site readjustment and/or trial run that may be required after a defective unit are repaired or replaced.

[Term]

The term of warranty for Product is twelve (12) months after your purchase or delivery of the Product to a place designated by you or eighteen (18) months from the date of manufacture whichever comes first ("Warranty Period"). Warranty period for repaired Product cannot exceed beyond the original warranty period before any repair work.

[Limitations]

(1) You are requested to conduct an initial failure diagnosis by yourself, as a general rule.
It can also be carried out by us or our service company upon your request and the actual cost will be charged. However, it will not be charged if we are responsible for the cause of the failure.

(2) This limited warranty applies only when the condition, method, environment, etc. of use are in compliance with the terms and conditions and instructions that are set forth in the instruction manual and user manual for the Product and the caution label affixed to the Product.

(3) Even during the term of warranty, the repair cost will be charged on you in the following cases;
- (i) a failure caused by your improper storing or handling, carelessness or negligence, etc., and a failure caused by your hardware or software problem
- (ii) a failure caused by any alteration, etc. to the Product made on your side without our approval
- (iii) a failure which may be regarded as avoidable, if your equipment in which the Product is incorporated is equipped with a safety device required by applicable laws and has any function or structure considered to be indispensable according to a common sense in the industry
- (iv) a failure which may be regarded as avoidable if consumable parts designated in the instruction manual, etc. are duly maintained and replaced
- (v) any replacement of consumable parts (battery, fan, smoothing capacitor, etc.)
- (vi) a failure caused by external factors such as inevitable accidents, including without limitation fire and abnormal fluctuation of voltage, and acts of God, including without limitation earthquake, lightning and natural disasters
- (vii) a failure generated by an unforeseeable cause with a scientific technology that was not available at the time of the shipment of the Product from our company
- (viii) any other failures which we are not responsible for or which you acknowledge we are not responsible for

2. Term of warranty after the stop of production

(1) We may accept the repair at charge for another seven (7) years after the production of the product is discontinued. The announcement of the stop of production for each model can be seen in our Sales and Service, etc.

(2) Please note that the Product (including its spare parts) cannot be ordered after its stop of production.

3. Service in overseas countries

Our regional FA Center in overseas countries will accept the repair work of the Product. However, the terms and conditions of the repair work may differ depending on each FA Center. Please ask your local FA center for details.

4. Exclusion of responsibility for compensation against loss of opportunity, secondary loss, etc.

Whether under or after the term of warranty, we assume no responsibility for any damages arisen from causes for which we are not responsible, any losses of opportunity and/or profit incurred by you due to a failure of the Product, any damages, secondary damages or compensation for accidents arisen under a specific circumstance that are foreseen or unforeseen by our company, any damages to products other than the Product, and also compensation for any replacement work, readjustment, start-up test run of local machines and the Product and any other operations conducted by you.

5. Change of Product specifications

Specifications listed in our catalogs, manuals or technical documents may be changed without notice.

6. Application and use of the Product

(1) For the use of our General-Purpose AC Servo, its applications should be those that may not result in a serious damage even if any failure or malfunction occurs in General-Purpose AC Servo, and a backup or fail-safe function should operate on an external system to General-Purpose AC Servo when any failure or malfunction occurs.

(2) Our General-Purpose AC Servo is designed and manufactured as a general purpose product for use at general industries. Therefore, applications substantially influential on the public interest for such as atomic power plants and other power plants of electric power companies, and also which require a special quality assurance system, including applications for railway companies and government or public offices are not recommended, and we assume no responsibility for any failure caused by these applications when used
In addition, applications which may be substantially influential to human lives or properties for such as airlines, medical treatments, railway service, incineration and fuel systems, man-operated material handling equipment, entertainment machines, safety machines, etc. are not recommended, and we assume no responsibility for any failure caused by these applications when used.
We will review the acceptability of the abovementioned applications, if you agree not to require a specific quality for a specific application. Please contact us for consultation.

MODEL	MR-JE-B SERVOAMPLIFIER INSTRUCTIONMANUAL
MODEL CODE	1CW750

MITSUBISHI ELECTRIC CORPORATION

HEAD OFFICE : TOKYO BLDG MARUNOUCHI TOKYO 100-8310

SH (NA) 030152-A (1411) MEE Printed in Japan

This Instruction Manual uses recycled paper.
Specifications are subject to change without notice.